NOTES:
1. MANHOLE TO MEET CURRENT REQUIREMENTS OF A.S.T.M. SPEC. C-476
2. ALL REINFORCING STEEL TO MEET CURRENT REQUIREMENTS OF A.S.T.M. SPEC. A-615
3. CONCRETE TO BE CLASS A.
4. TAPERED JOINT WITH O-RING GASKET TO MEET CURRENT REQUIREMENTS OF A.S.T.M. SPEC. C-361
5. PIONEER 301 MASTIC OR APPROVED EQUAL SHALL BE USED IN ADDITION TO THE JOINT SPECIFIED.
6. GROUT INVERTS SHALL CONSIST OF A PORTLAND CEMENT CONCRETE MIX TO VIRGINIA DEPARTMENT OF TRANSPORTATION SPECIFICATION FOR CLASS B-2 OR CONTAINING 1 PART CEMENT, 2 PARTS MORTAR SAND AND 3 1/2 PARTS AGGREGATE. THE SURFACE SHALL BE HAND TROWELED SMOOTH WITH NO COARSE AGGREGATE EXPOSED AND THE BENCHES ARE TO HAVE A LIGHT BROOM FINISH.
7. FLEXIBLE JOINT REQUIRED ON ALL PIPE CONNECTIONS TO MANHOLE. FLEXIBLE JOINT PIPE TO MANHOLE SLEEVE MAY BE KOR-N-SEAL, INTERSPACE, PRESSWEDGE OR APPROVED EQUAL. INSTALLATION SHALL BE IN ACCORDANCE WITH MANUFACTURER'S INSTRUCTIONS. REFER ALSO TO STD. DETAILS.
8. JOINT CONFIGURATION MAY BE CAST BELL-UP OR SPIGOT-UP.

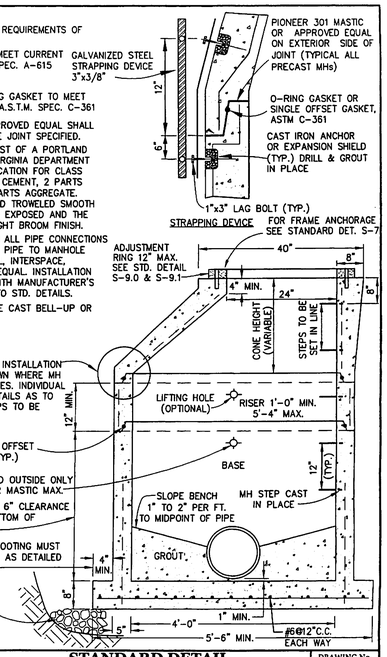

DATE:	**STANDARD DETAIL** TYPICAL 4'-0" I.D. PRECAST CONCRETE MANHOLE	DRAWING No. S 1.0
REVISED: BY		
APPROVED:	**CITY OF FALLS CHURCH, VIRGINIA** DEPARTMENT OF ENVIRONMENTAL SERVICES PUBLIC UTILITIES DIVISION	
PREPARED:		SCALE: NONE

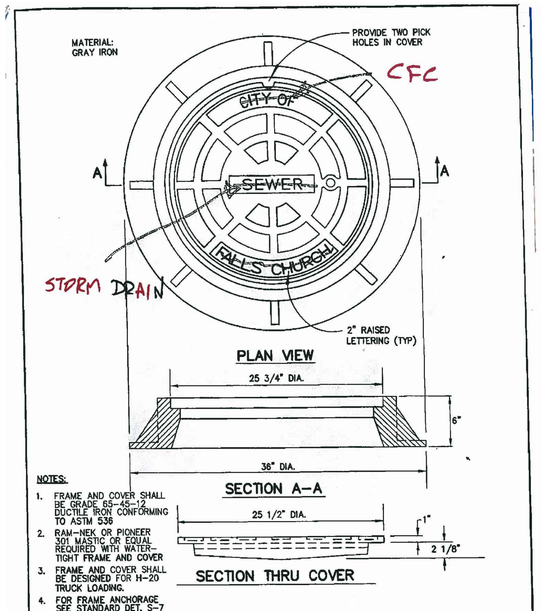

NOTES:
1. FRAME AND COVER SHALL BE GRADE 65-45-12 DUCTILE IRON CONFORMING TO ASTM 536
2. RAM-NEK OR PIONEER 301 MASTIC OR EQUAL REQUIRED WITH WATER-TIGHT FRAME AND COVER
3. FRAME AND COVER SHALL BE DESIGNED FOR H-20 TRUCK LOADING.
4. FOR FRAME ANCHORAGE SEE STANDARD DET. S-7

DATE:	**STANDARD DETAIL** STANDARD MANHOLE FRAME & COVER	DRAWING No. S 10.0
REVISED: BY		
APPROVED:	**CITY OF FALLS CHURCH, VIRGINIA** DEPARTMENT OF ENVIRONMENTAL SERVICES PUBLIC UTILITIES DIVISION	
PREPARED:		SCALE: NONE

NOTE :
1. CONCRETE TO BE CLASS A.
2. ALL REINFORCING TO MEET REQUIREMENTS OF CURRENT A.S.T.M. SPEC. A-615
3. MANHOLE SECTIONS TO MEET REQUIREMENT OF CURRENT A.S.T.M. SPEC. C-478
4. TAPERED JOINT WITH O-RING GASKET TO MEET CURRENT REQUIREMENTS OF A.S.T.M. SPEC. C-361.
5. DOGHOUSE OPENING MAY ONLY BE USED WHEN PLACING A NEW MANHOLE OVER AN EXISTING LINE; OTHERWISE, THE OPENING MUST BE CAST. SIZE, LOCATION & ANGLE OF ENTRY SHALL BE AS REQUIRED BY THE PLANS.
6. MANHOLE SECTION TO BE CASE IN THE BASE OF A MINIMUM OF 2".
7. JOINT CONFIGURATION MAY BE CAST BELL-UP OR SPIGOT-UP.
8. HOLES IN PRECASE UNITS ARE TO BE 4" MIN. TO 8" MAX. LARGER THAN THE OUTSIDE DIA. OF THE PROPOSED PIPE.
9. BASE SECTION TO PROVIDE MIN. 6" CLEARANCE BETWEEN TOP OF PIPE OPENING AND BOTTOM OF BELL AND SPIGOT JOINT.

CHART "A"

	MIN. DIMENSIONS		
MH	4'-0"	5'-0"	6'-0"
A	48"	60"	72"
B	58"	72"	86"
C	5"	6"	7"
D	6"	8"	10"

NOTE:
FOR DOGHOUSE BASE CONSTRUCTED OVER PVC PIPE, REMOVE EXISTING PVC PIPE BEYOND BASE DIMENSIONS AND BELL/PLAIN END INSERT SHORT LENGTHS OF PVC PIPE INTO STANDARD MANHOLE BASE WITH FLEXIBLE GASKET CONNECTORS

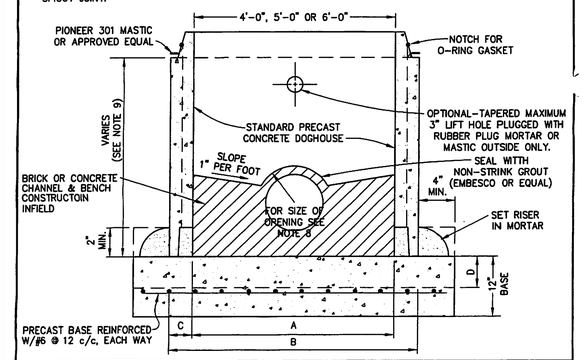

DATE:	**STANDARD DETAIL** PRECAST CONCRETE MANHOLE DOGHOUSE BASE	DRAWING No. S 4.0
REVISED: BY		
APPROVED:	**CITY OF FALLS CHURCH, VIRGINIA** DEPARTMENT OF ENVIRONMENTAL SERVICES PUBLIC UTILITIES DIVISION	
PREPARED:		SCALE: NONE

CITY OF FALLS CHURCH
FIRE MARSHAL
300 PARK AVENUE
FALLS CHURCH, VA 22046
Phone: (703) 248-5058 Fax: (703) 248-5158
Email: FireMarshal@fallschurchva.gov

Fire Department Connection (FDC) Signage

The Falls Church City Code requires all buildings with a Fire Department Connection (Sprinkler and/or Standpipe) must have FDC signage located 8-12 feet above the Fire Department Connection. Signage must be glow-in-the-dark or reflective with a **RED** background with at least 6 inch white lettering. Minimum size of the sign should be 14"x10". The code also requires that FDC connections be clear from trees, brush or any barriers that may hamper access to the suppression system by the fire department.

In addition, all NEW buildings are required to also include a RED exterior strobe light either above or just below the FDC sign that is tied into the fire alarm system.

Sample from http://www.compliancesigns.com/NHE-9456.shtml

Questions regarding the procedures and clarification may be directed to the City of Falls Church Fire Marshal at FireMarshal@fallschurchva.gov or calling (703) 248-5058.

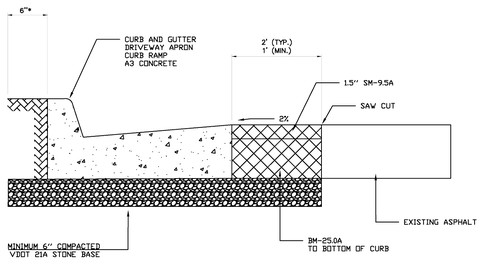

NOTES :
1. TACK COAT MUST BE PLACED ON SAW CUT EDGE AND EXISTING EDGE OF ASPHALT TO CREATE A WATERTIGHT SEAL.
2. IF SIDEWALK IS ADJACENT TO CURB , OMIT 21A EXTENSION.

SCALE: N.T.S.

ISSUED:	7/7/15	**STANDARD DETAIL** ASPHALT SAW CUT	DRAWING NO. 301
REVISION:	1.0		
REVISION:			
APPROVED:	MW/MC		

CITY OF FALLS CHURCH VA PUBLIC WORKS

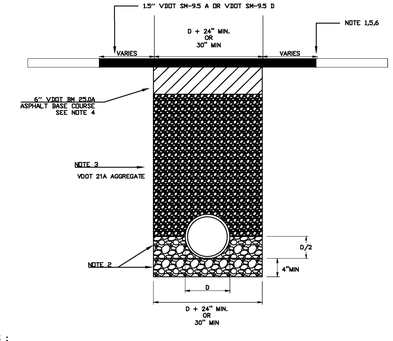

NOTES :
1. ALL PAVEMENTS SHALL BE SAW CUT WITH NEAT UNIFORM LINES PRIOR TO EXCAVATION
2. PIPE BEDDING MATERIAL SHALL BE PER UTILITY REQUIREMENTS. ALTERNATIVE MATERIAL MUST BE APPROVED BY DEPARTMENT OF PUBLIC WORKS.
3. BACKFILL MATERIAL SHALL BE VDOT NO.21A AGGREGATE, PLACED IN LOOSE LIFTS NOT EXCEEDING 6" AND COMPACTED TO AT LEAST 95% MAXIMUM DRY DENSITY WITHIN 2 PERCENT POINTS OF OPTIMUM. MOISTURE (VTM-1) WITH USE OF MECHANICAL TAMPERS OR VIBRATORY ROLLERS. WATER COMPACTION IS NOT PERMITTED AND AREAS IN EXCESS OF 50 CY SHALL REQUIRE TESTING PERFORMED AND CERTIFIED GEOTECHNICAL ENGINEER OR A VDOT-CERTIFIED TECHNICIAN. RESULTS SHALL BE PROVIDED TO THE INSPECTOR WITHIN 24 HOURS OF TESTING COMPLETION. THE COST OF ALL TESTING IS THE RESPONSIBILITY OF THE PERMITTEE FIELD DENSITY TESTING METHODS SHALL BE APPROVED BY DEPARTMENT OF PUBLIC WORKS PRIOR TO TESTING
4. DEPTHS FOR AGGREGATE BASE, ASPHALT BASE AND ASPHALT SURFACE COURSE SHALL BE AS SHOWN. THE CONTRACTOR SHALL NOTIFY THE DEPARTMENT OF PUBLIC WORKS AFTER THE TRENCH HAS BEEN OPEN. THE MINIMUN DEPTHS IN ANY CASE SHALL BE 6" OF AGGREGATE BASE, 6" ASPHALT BASE AND 2" SURFACE COURSE.
5. THE REPAIR SHALL BE RECTANGULAR AND SAW CUT STRAIGHT, UNIFORM LINES THAT ARE ALLIGNED WITH THE STREET CENTERLINE. WHEN EDGES OF PAVEMENT HAVE BEEN UNDERMINED, PAVEMENT SHALL BE REMOVED TO A NEAT LINE 12" EXTENDING THE WIDTH OF THE LANE. ANY INITIAL PAVEMENT ANY INITIAL PAVEMENT REPAIR WITH AN AREA GREATER THAN 40 SQUARE FEET MAY BE NON RECTANGULAR, HOWEVER, THE REPAIR SHALL BE SAW CUT IN STRAIGHT, UNIFORM LINES.
6. TACK COAT IS REQUIRED ON ALL SURFACES THAT WILL CONTACT THE NEW SURFACE LAYER.
7. VDOT SM-9.5 D MUST BE USED ON MAIN ARTERIAL STREETS (BROAD STREET AND WASHINGTON STREET). ALL OTHER STREETS MAY USE VDOT SM-9.5A.
8. ANY OPEN CUT LESS THAN 30" IN WIDTH MUST USE FLOWABLE FILL. (DETAIL 101)

SCALE: N.T.S.

ISSUED:	1/16/15	**STANDARD DETAIL** UTILITY TRENCH REPAIR IN PAVEMENT VDOT NO. 21A AGGREGATE	DRAWING NO. 1401
REVISION:	1.0		
REVISION:			
APPROVED:	MW/MC		

CITY OF FALLS CHURCH VA PUBLIC WORKS

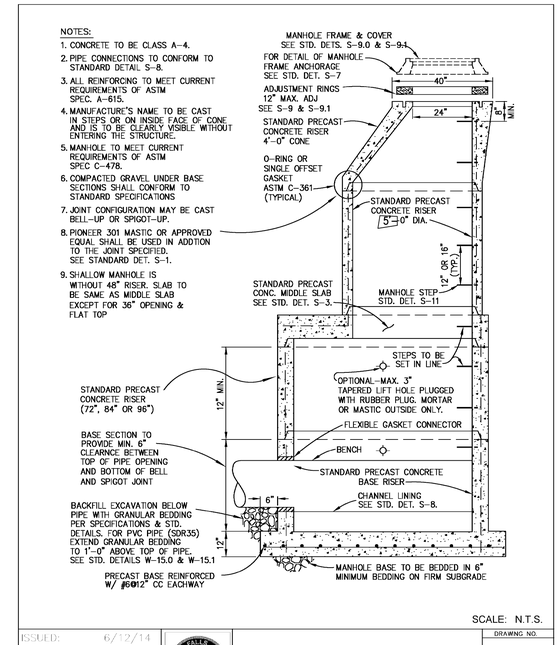

NOTES:
1. CONCRETE TO BE CLASS A-4.
2. PIPE CONNECTIONS TO CONFORM TO STANDARD DETAIL S-8.
3. ALL REINFORCING TO MEET CURRENT REQUIREMENTS OF ASTM SPEC. A-615.
4. MANUFACTURE'S NAME TO BE CAST IN STEPS OR ON INSIDE FACE OF CONE AND IS TO BE CLEARLY VISIBLE WITHOUT ENTERING THE STRUCTURE.
5. MANHOLE TO MEET CURRENT REQUIREMENTS OF ASTM SPEC C-478.
6. COMPACTED GRAVEL UNDER BASE SECTIONS SHALL CONFORM TO STANDARD SPECIFICATIONS
7. JOINT CONFIGURATION MAY BE CAST BELL-UP OR SPIGOT-UP.
8. PIONEER 301 MASTIC OR APPROVED EQUAL SHALL BE USED IN ADDTION TO THE JOINT SPECIFIED. SEE STANDARD DET. S-1.
9. SHALLOW MANHOLE IS WITHOUT 48" RISER. SLAB TO BE SAME AS MIDDLE SLAB EXCEPT FOR 36" OPENING & FLAT TOP

SCALE: N.T.S.

ISSUED:	6/12/14	**STANDARD DETAIL** TYPICAL PRECAST MANHOLE 60",72",84",96"DIAMETER	DRAWING NO. S 2
REVISION:	1.0		
REVISION:	6/12/14		
APPROVED:	MAH		

CITY OF FALLS CHURCH VA PUBLIC FACILITIES MANUAL

MODIFIED 5'-ID MANHOLE

NOTES:
1. PAVEMENT PATCH FOR UTILITY INSTALLATION
2. PAVEMENT THICKNESS SHOWN HERE ARE MINIMUMS. CONTRACTOR TO MATCH EXISTING PAVEMENT SECTION IF THICKER

NOTE:
ALL DETAILS PROVIDED ON THIS SHEET ARE CURRENT AT TIME OF SITE PLAN PREPARATION. CONTRACTOR IS RESPONSIBLE FOR USING CURRENT DETAILS AT TIME OF CONSTRUCTION

WALTER L. PHILLIPS INCORPORATED ESTABLISHED 1945
Engineers • Surveyors • Planners
Landscape Architects • Arborists
207 PARK AVENUE
FALLS CHURCH, VIRGINIA 22046
(703) 532-6163 Fax (703) 533-1301
www.WLPINC.com

DRAWN: AVI/KW/ TT | CHECKED: KW
SCALE: NONE | DATE: SESP PRE-SUB01 5/15/2020, SESP SUB01 06/08/2020

COMMONWEALTH OF VIRGINIA PROFESSIONAL ENGINEER
KAREN L. S. WHITE Lic. No.041850
6/08/2020

NO.	DESCRIPTION	DATE	REV.: BY	APPROVED

REVISION APPROVED BY

NOTE: THE VERTICAL DATUM REFERENCED ON THIS PLAN IS THE NORTH AMERICAN DATUM OF 1988 (NAVD88)

CITY OF FALLS CHURCH DETAILS

WEST FALLS CHURCH ECONOMIC DEVELOPMENT

SPECIAL EXCEPTION SITE PLAN
CITY OF FALLS CHURCH, VIRGINIA

SHEET: C-0208

NOTE: SEE DETAIL R.17 FOR PAVING AT ANY MANHOLE WITHIN CROSSWALK

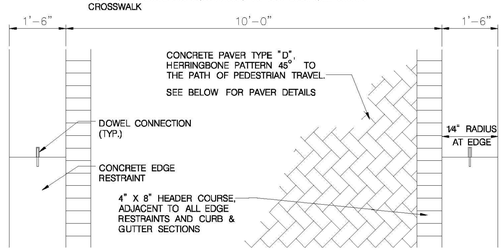

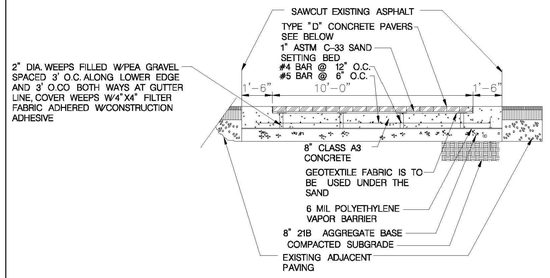

TYPICAL CROSSWALK

KEY	TYPE	MANUFACTURER	SIZE	PRODUCT NAME	COLOR	SALT & FROST RESISTANCE
PAVERS						
A	BRICK PAVER	YANKEE HILL	4" x 8" x 2.25"		MEDIUM RED VELOUR	GRADE SX TYPE 1
B	FACE BRICK	YANKEE HILL	3-5/8" x 7-5/8" x 2-1/4"		MEDIUM RED VELOUR	GRADE SX TYPE 1
C	BULLNOSE SHAPED BRICK	YANKEE HILL	3-5/8" x 8" x 2-1/4"		MEDIUM RED VELOUR	GRADE SX TYPE 1
D	CONCRETE PAVER	HANOVER	4" x 8" x 3-1/8"	PREST BRICK	QUARRY RED, NATURAL FINISH	ASTM C936-82 / ASTM C67
E	DETECTABLE WARNING PAVER	HANOVER	11-3/4" x 11-3/4" x2"	DETECTABLE WARNING PAVER	CHARCOAL	ASTM C936-82 / ASTM C67

PAVER DETAILS

SCALE: N.T.S.

ISSUED: 02-01-13	CITY OF FALLS CHURCH VIRGINIA	WEST BROAD STREETSCAPE TYPICAL CROSSWALK & PAVER DETAILS	DRAWING NO. R. 15
REVISION: V1.0.0			
REVISION:			
APPROVED:			

CITY OF FALLS CHURCH VA PUBLIC FACILITIES MANUAL

PLOTTED: Wednesday, December 18, 2013 AT 08:04 PM
FILE: S:\DWG\Public Works Trails, Civil, 9000-09\Geo 11 Public Facilities Manual\dwg\DRAFT FINAL DETAILS.dwg

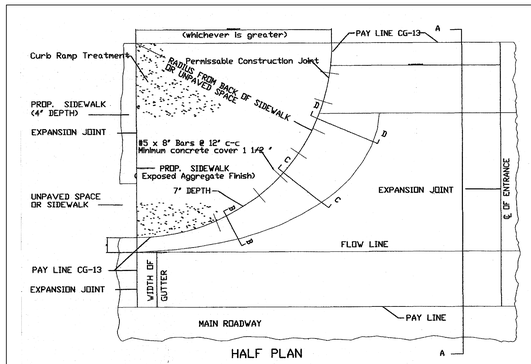

HALF PLAN

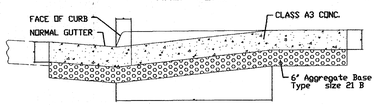

SECTION A-A

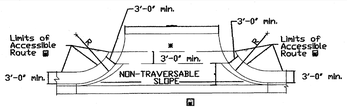

ACCESSIBLE ROUTE DETAIL

Detail to be used when the combined width of unpaved space and sidewalk space is less than 7'.

▣ Accessible route is defined as a continuous unobstructed, stable, firm and slip resistant path connecting all accessible elements of a facility that can be approached, entered and used by persons with mobility inpairments.

✱ If accessible routes are being provided, a minimum 3' traversable width is required.

NOTES:

Prop. 7' Sidewalk is to be poured monolithically with Entrance or by using permissable construction joint with required bars.

Proposed 7' sidewalk to be class A-3 concrete with exposed aggregate finish.

Required bars are to be No. 5x8' placed 1' center to center along back of curb, mid-depth of sidewalk. Minimum Concrete cover 1 1/2 '.

All details and dimensions not shown are the same as Standard CG-9D.

This design may also be applied to other Entrance Standards as the need arises.

Limits of Exposed aggregate sidewalk for curb ramp treatment

When used in conjunction with Standard CG-3 or CG-7, the curb face on. This Standard is to be adjusted to match the mountable curb configuration.

STANDARD CG-13

SECTION

CG-6

NOTES:

1. THIS ITEM MAY BE PRECAST OR CAST IN PLACE.
2. CONCRETE TO BE CLASS A3 IF CAST IN PLACE, 4000 PSI IF PRECAST.
3. COMBINATION CURB & GUTTER HAVING A RADIUS OF 200 FEET OR LESS (ALONG FACE OF CURB) SHALL BE PAID FOR AS RADIAL. COMBINATION CURB & GUTTER.
4. FOR USE WITH STABILIZED OPEN-GRADED DRAINAGE LAYER, THE BOTTOM OF THE CURB AND GUTTER SHALL BE CONSTRUCTED PARALLEL TO THE SLOPE OF SUBBASE COURSES AND TO THE DEPTH OF THE PAVEMENT.
5. ALLOWABLE CRITERIA FOR THE USE OF CG-6 IS BASED ON ROADWAY CLASSIFICATION AND DESIGN SPEED AS SHOWN IN APPENDIX A OF THE VDOT ROAD DESIGN MANUAL.

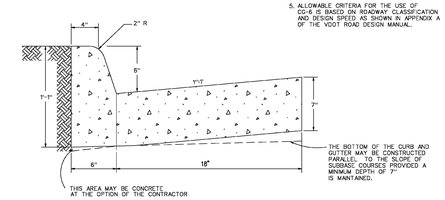

ALL CURB AND GUTTER INTERNAL TO THE PROJECT AND ALONG HAYCOCK ROAD TO BE 18" GUTTER PLAN

NOTE: ALL CURB AND GUTTER CONSTRUCTION METHODS AND MATERIALS SHALL COMPLY WITH VDOT SPECIFICATIONS AND DETAILS.

SPECIFICATION REFERENCE	MODIFIED COMBINATION 6" CURB & GUTTER	REV. 9/06
105 502	VIRGINIA DEPARTMENT OF TRANSPORTATION	201.03

NOTE:
ALL DETAILS PROVIDED ON THIS SHEET ARE CURRENT AT TIME OF SITE PLAN PREPARATION. CONTRACTOR IS RESPONSIBLE FOR USING CURRENT DETAILS AT TIME OF CONSTRUCTION

WALTER L. PHILLIPS INCORPORATED
ESTABLISHED 1945
Engineers • Surveyors • Planners
Landscape Architects • Arborists
207 PARK AVENUE
FALLS CHURCH, VIRGINIA 22046
(703) 532-6163 Fax (703) 533-1301
www.WLPINC.com

COMMONWEALTH OF VIRGINIA
KAREN L. S. WHITE
Lic. No.041850
6/08/2020
PROFESSIONAL ENGINEER

DRAWN: AVI/KW/ TT
CHECKED: KW
DATE: SESP PRE-SUBD1 5/15/2020, SESP SUBD1 06/08/2020
SCALE: NONE

REVISION APPROVED BY

NO.	DESCRIPTION	DATE	REV. BY	APPROVED	DATE

NOTE: THE VERTICAL DATUM REFERENCED ON THIS PLAN IS THE NORTH AMERICAN DATUM OF 1988 (NAVD88)

CITY OF FALLS CHURCH DETAILS

WEST FALLS CHURCH ECONOMIC DEVELOPMENT

SPECIAL EXCEPTION SITE PLAN
CITY OF FALLS CHURCH, VIRGINIA

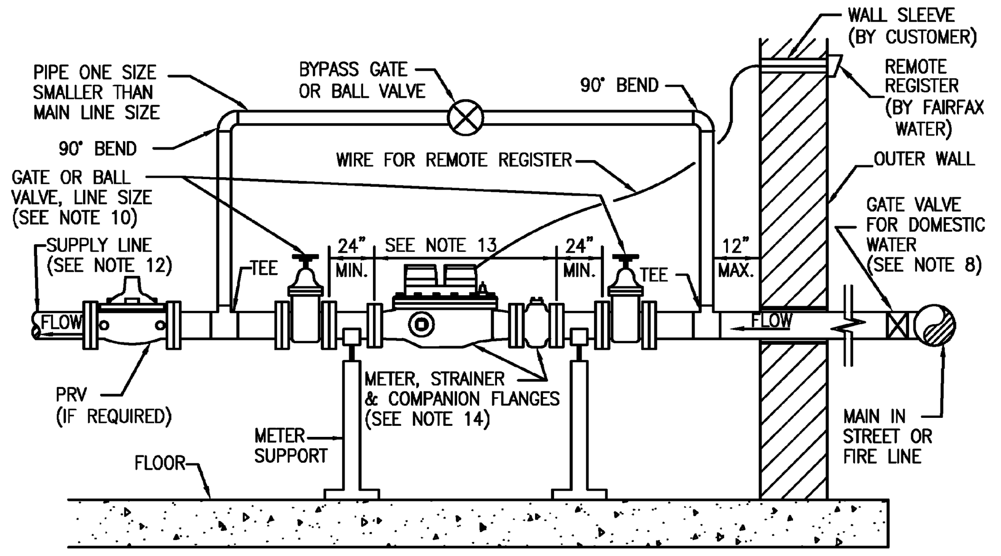

TYPICAL INSTALLATION SECTION VIEW

NOTES:
1. THE WATER METER WILL BE LOCATED IN AN ACCESSIBLE LOCATION AND WILL NOT BE INSTALLED UNDER EXISTING PIPING OR CLOSE TO OTHER FACILITIES. CRAWL SPACES ARE UNACCEPTABLE.
2. WATER METER TO BE INSTALLED NOT MORE THAN 2.0' ABOVE THE FLOOR, OR CLOSER THAN 1.0' TO ANY WALL OR OTHER FIXED OBJECT.
3. THE DEVELOPER SHALL MAKE PROVISIONS FOR DISCHARGE OF A LARGE VOLUME OF EXCESS WATER RESULTING FROM METER TESTING AND METER REPAIRS AS REQUIRED BY FAIRFAX WATER.
4. THE METER INSTALLATION WILL BE INSPECTED AND APPROVED BY FAIRFAX WATER. CALL 703-289-6402 FOR INSPECTION PRIOR TO PLACING LINE IN SERVICE. (REMOTE REGISTER TO BE INSTALLED OUTSIDE BUILDING IF REQUIRED).
5. IT SHALL BE THE RESPONSIBILITY OF THE OWNER TO PREVENT THE METER FROM FREEZING.
6. SUPPORT IS REQUIRED FOR THE METER.
7. INCOMING LINE SIZE MUST BE THE SAME AS METER SIZE AT LEAST 3' BEFORE THE METER.
8. A 3" MINIMUM GATE VALVE WITH A 2" OPERATING NUT MUST BE INSTALLED AT THE MAIN IN THE STREET OR FIRE LINE.
9. NO TAPS, PRV'S, STRAINERS, OR BACKFLOW PREVENTOR ARE TO BE INSTALLED BEFORE METER.
10. GATE VALVES OR BALL VALVES MUST BE INSTALLED ON BOTH SIDES OF THE METER, AND ON THE BYPASS. BUTTERFLY VALVES ARE NOT ACCEPTABLE.
11. FAIRFAX WATER TO SUPPLY AND INSTALL REMOTE REGISTER. WIRE FOR REMOTE REGISTER TO BE FURNISHED BY FAIRFAX WATER AND INSTALLED BY CUSTOMER IF REQUIRED.
12. BACKFLOW PREVENTIONS WILL BE REQUIRED IN ACCORDANCE WITH FAIRFAX COUNTY'S REGULATIONS.
13. 3" METER IS 24" LONG, 4" IS 29" LONG AND 6" IS 36" LONG.
14. METER, STRAINER AND COMPANION FLANGES FURNISHED BY FAIRFAX WATER AND INSTALLED BY CUSTOMER.

FAIRFAX WATER STANDARD DETAILS | SCALE: NOT TO SCALE
INTERIOR METER INSTALLATION WITH BY-PASS 3" AND LARGER COMPOUND METERS | DRAWING NO.: 11
DATE: 7/17

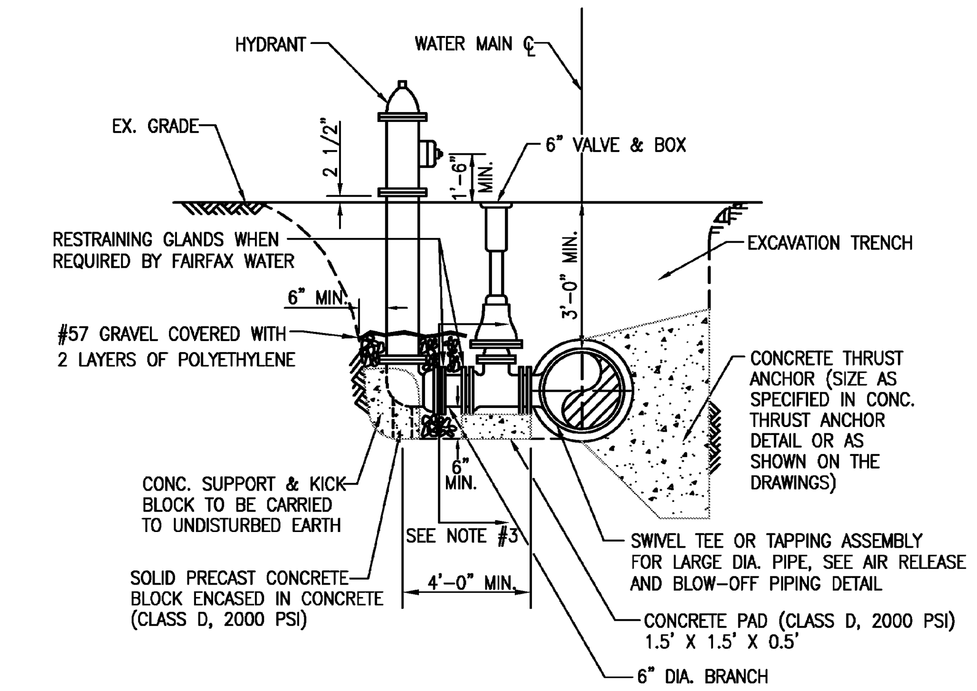

NOTES:
1. IF SWIVEL TEE IS NOT USED, VALVE MUST BE RESTRAINED TO TEE WITH RESTRAINING GLANDS BY CONTRACTOR.
2. HYDRANTS SHALL HAVE SHOP-APPLIED COATINGS AS FOLLOWS:
   - HYDRANT BARREL: KENNEDY SAFETY RED OR MUELLER RED #10
   - TOPS AND CAPS: KENNEDY SILVER OR MUELLER SILVER #18
   - WHERE INDICATED BY FAIRFAX WATER, THE TOP SHALL BE SHOP-COATED RED AND THE BARREL AND CAPS SHALL BE SHOP-COATED SILVER IN LIEU OF THE ABOVE.
3. POLYETHYLENE ENCASEMENT TO BE INSTALLED UP TO 6-INCHES BELOW PROPOSED GRADE. ENCASEMENT SHALL BE INSTALLED SO AS NOT TO PREVENT DISCHARGE OF WATER THROUGH HYDRANT DRAIN HOLES.
4. FOR HYDRANT LOCATION IN REGARD TO FACE OF CURB, SEE FAIRFAX COUNTY PUBLIC FACILITIES MANUAL.

FAIRFAX WATER STANDARD DETAILS | SCALE: NOT TO SCALE
STANDARD HYDRANT INSTALLATION | DRAWING NO.: 30
DATE: 7/17

PIPE SIZE INCHES	DEGREE OF BEND (ø)	(1) WORKING PRESSURE 175 PSI		
		L	H	T
6	90	3.0	2.0	1.25
	45	2.0	1.5	1.0
	22.5	1.5	1.0	1.0
8	90	4.0	2.5	1.75
	45	2.5	2.0	1.0
	22.5	2.0	1.5	1.0
12	90	5.5	4.0	2.25
	45	4.0	3.0	1.5
	22.5	3.0	2.0	1.0
16	90	7.5	5.0	3.25
	45	5.0	4.5	2.0
	11.25/22.5	4.0	3.0	1.5
20	90	9.5	6.0	4.0
	45	7.0	4.5	2.75
	11.25/22.5	5.5	3.0	2.0
24	90	13.0	6.5	5.5
	45	9.0	5.0	3.5
	11.25/22.5	6.0	4.0	2.0

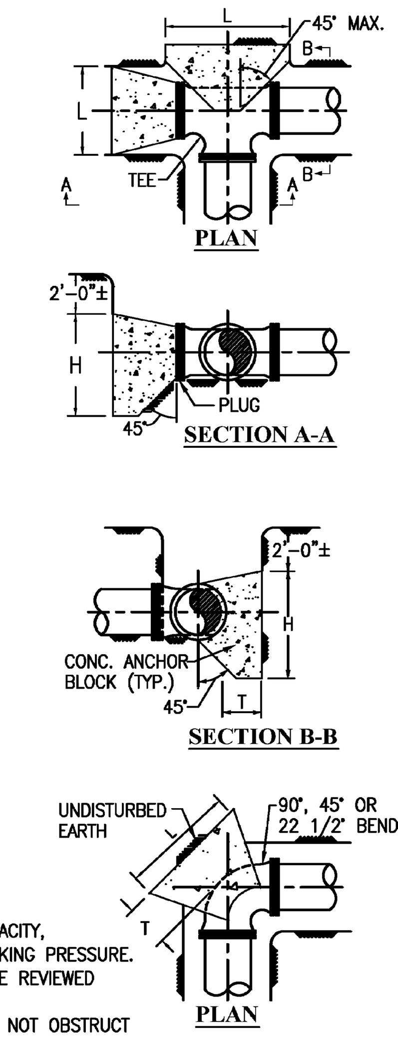

NOTES:
1. MINIMUM CONCRETE ANCHOR BLOCK DIMENSIONS IN FEET.
2. PROVIDE FORM WORK FOR ALL CONCRETE.
3. CONCRETE SHALL BE CLASS D 2000 PSI.
4. THE ABOVE TABLE IS BASED ON 2000 PSF SOIL BEARING CAPACITY, R=2PA SIN (ø/2) AND FOR A TEST PRESSURE = 1.5 x WORKING PRESSURE.
5. ANCHOR BLOCK DESIGN FOR PIPE LARGER THAN 24" SHALL BE REVIEWED ON AN INDIVIDUAL BASIS BY FAIRFAX WATER.
6. WRAP FITTING WITH POLYETHYLENE SHEETING. CONCRETE MUST NOT OBSTRUCT ACCESS TO MECHANICAL JOINT ASSEMBLY.
7. CONCRETE ANCHOR BLOCK DIMENSIONS FOR TEES TO BE SAME AS FOR 90° BENDS.
8. HEIGHT OF CONCRETE ANCHOR BLOCK ABOVE PIPE CENTERLINE IS 1/3 THE H DIMENSION.
9. BLOCKING SHALL BACK TO UNDISTURBED EARTH.

FAIRFAX WATER STANDARD DETAILS | SCALE: NOT TO SCALE
CONCRETE THRUST ANCHORS | DRAWING NO.: 23
DATE: 7/17

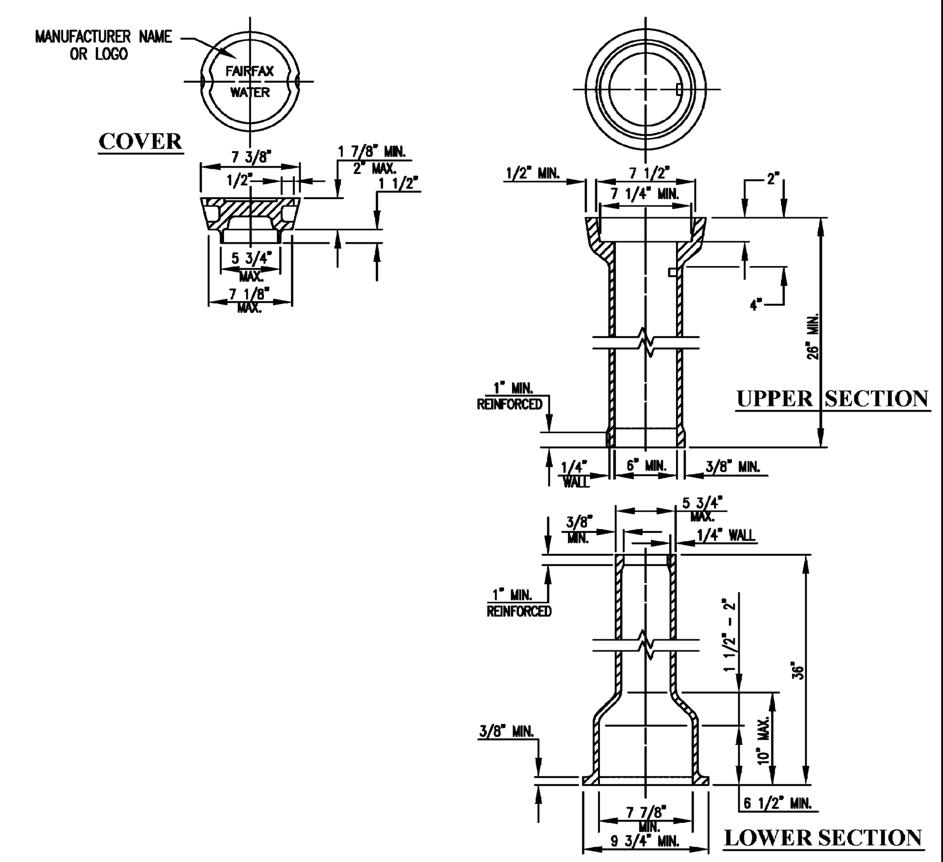

NOTES:
1. THE MANUFACTURER IDENTIFICATION AND COUNTRY OF ORIGIN (IF OTHER THAN U.S.) SHALL BE CAST INTO ALL PARTS.
2. GUARD POSTS ARE NOT TO BE INSTALLED AT VALVES UNLESS INDICATED ON DRAWINGS, OR AS SPECIFIED BY FAIRFAX WATER.
3. VALVE BOX MUST MEET SPECIFICATIONS CONTAINED IN FAIRFAX WATER'S APPROVED PRODUCTS LIST.
4. FOR VALVE BOXES DEEPER THAN SIX FEET, USE 5-INCH DIAMETER GRAY CAST IRON (SOIL) PIPE TO EXTEND STANDARD TOP AND BOTTOM SECTIONS.
5. STACKING OF VALVE BOX SECTIONS IS NOT ACCEPTABLE.

FAIRFAX WATER STANDARD DETAILS | SCALE: NOT TO SCALE
VALVE BOX | DRAWING NO.: 27
DATE: 7/17

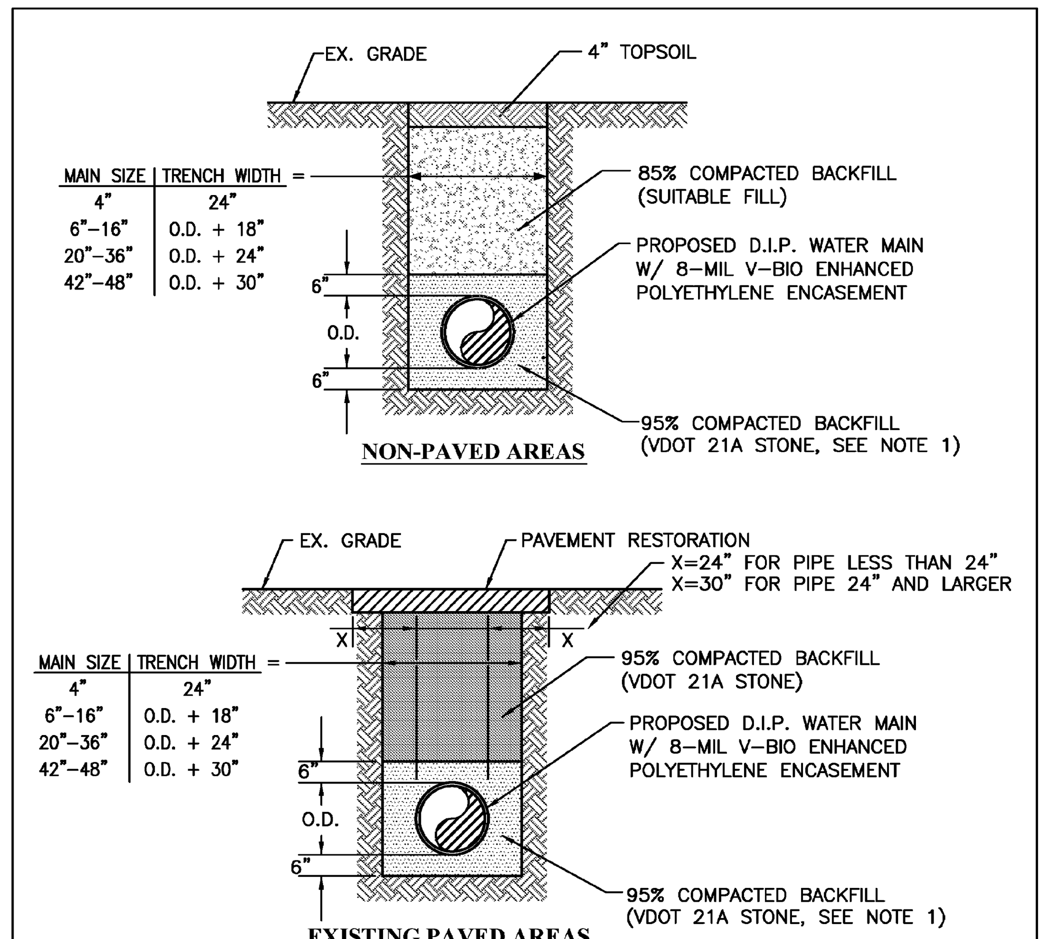

NOTES:
1. VDOT NO. 57 STONE SHALL BE USED AT CREEK CROSSINGS OR IN AREAS WHERE TRENCH CONTAINS GROUND WATER.
2. ALL PAVEMENT RESTORATION AND COMPACTED BACKFILL WITHIN VDOT RIGHT-OF-WAY SHALL ADHERE TO ALL APPLICABLE VDOT SPECIFICATIONS.
3. RESTRAINED JOINT PIPE SHALL BE IDENTIFIED WITH MARKING TAPE PLACED 2 FEET ABOVE PIPE.
4. ALL WATER MAIN INSTALLATION IN AREAS WITH PROPOSED PAVING SHALL ADHERE TO APPROVED DEVELOPMENT PLAN.

FAIRFAX WATER STANDARD DETAILS | SCALE: NOT TO SCALE
TRENCH - DUCTILE IRON PIPE | DRAWING NO.: 12
DATE: 7/17

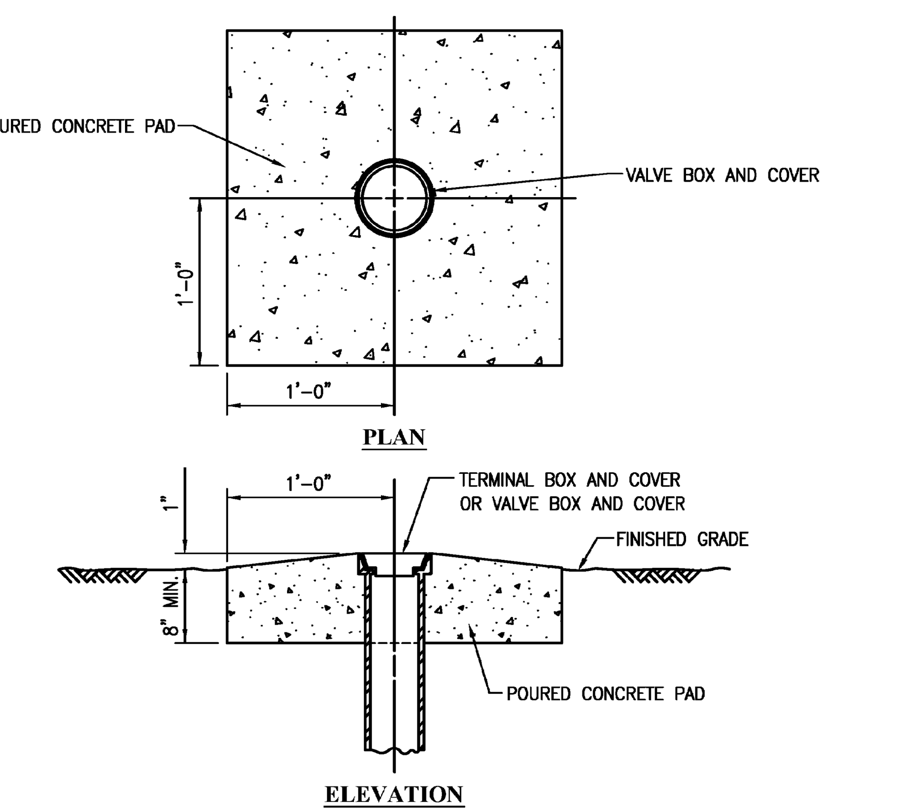

NOTES:
1. CONCRETE PADS FOR WATER MAIN VALVE AND TERMINAL BOX ARE TO BE INSTALLED USING REQUIREMENTS FOR CLASS D CONCRETE (2000 PSI).
2. PADS TO BE FORMED AND PROPERLY FINISHED.
3. VALVE BOX CONCRETE PAD TO BE INSTALLED ON ALL VALVES IN NON-PAVED AREAS OR AS DIRECTED BY FAIRFAX WATER.
4. GUARD POSTS ARE NOT TO BE INSTALLED AT VALVES UNLESS INDICATED ON DRAWINGS, OR AS SPECIFIED BY FAIRFAX WATER.

FAIRFAX WATER STANDARD DETAILS | SCALE: NOT TO SCALE
VALVE BOX CONCRETE PAD | DRAWING NO.: 28
DATE: 7/17

NOTE:
ALL DETAILS PROVIDED ON THIS SHEET ARE CURRENT AT TIME OF SITE PLAN PREPARATION. CONTRACTOR IS RESPONSIBLE FOR USING CURRENT DETAILS AT TIME OF CONSTRUCTION

WALTER L. PHILLIPS INCORPORATED ESTABLISHED 1945
Engineers • Surveyors • Planners
Landscape Architects • Arborists
207 PARK AVENUE
FALLS CHURCH, VIRGINIA 22046
(703) 532-6163 Fax (703) 533-1301
www.WLPINC.com

SCALE: NONE | DATE: SESP PRE-SUB01 5/15/2020, SESP SUB01 06/08/2020 | DRAWN: AI / KW / TT | CHECKED: KW

COMMONWEALTH OF VIRGINIA
KAREN L. S. WHITE
Lic. No.041850
6/08/2020
PROFESSIONAL ENGINEER

REVISION APPROVED BY

NO.	DESCRIPTION	DATE	REV. BY	APPROVED	DATE

NOTE: THE VERTICAL DATUM REFERENCED ON THIS PLAN IS THE NORTH AMERICAN DATUM OF 1988 (NAVD88)

FAIRFAX WATER DETAILS

WEST FALLS CHURCH ECONOMIC DEVELOPMENT

SPECIAL EXCEPTION SITE PLAN

CITY OF FALLS CHURCH, VIRGINIA

CG-12

GENERAL NOTES:

1. THE DETECTABLE WARNING SHALL BE PROVIDED BY TRUNCATED DOMES.
2. DETECTABLE WARNING SHALL BE FROM THE MATERIALS APPROVED LIST FOR DETECTABLE WARNING SURFACES. PRODUCTS NOT LISTED SHALL MEET THE REQUIREMENTS OF THE SPECIAL PROVISION FOR CG-12 DETECTABLE WARNING SURFACE AND SHALL BE SUBMITTED TO THE STANDARDS AND SPECIAL DESIGN SECTION FOR APPROVAL.
3. SLOPING SIDES OF CURB RAMP MAY BE POURED MONOLITHICALLY WITH RAMP FLOOR OR BY USING PERMISSIBLE CONSTRUCTION JOINT WITH REQUIRED BARS.
4. IF RAMP FLOOR IS PRECAST, HOLES MUST BE PROVIDED FOR DOWEL BARS SO THAT ADJOINING FLARED SIDES CAN BE CAST IN PLACE AFTER PLACEMENT OF PRECAST RAMP FLOOR. PRECAST CONCRETE SHALL BE CLASS A-4.
5. REQUIRED BARS ARE TO BE NO. 5 X 8' PLACED 1' CENTER TO CENTER ALONG BOTH SIDES OF THE RAMP FLOOR, MID-DEPTH OF RAMP FLOOR. MINIMUM CONCRETE COVER 1½".
6. CURB / CURB AND GUTTER SLOPE TRANSITIONS ADJACENT TO CURB RAMPS ARE INCLUDED IN PAYMENT FOR CURB / CURB AND GUTTER.
7. CURB RAMPS ARE TO BE LOCATED AS SHOWN ON THE PLANS OR AS DIRECTED BY THE ENGINEER. THEY ARE TO BE PROVIDED AT INTERSECTIONS WHEREVER AN ACCESSIBLE ROUTE WITHIN THE RIGHT OF WAY OF A HIGHWAY FACILITY CROSSES A CURB REGARDLESS OF WHETHER SIDEWALK IS EXISTING, PROPOSED, OR NONEXISTENT. THEY MUST BE LOCATED WITHIN PEDESTRIAN CROSSWALKS AS SHOWN ON PLANS OR AS DIRECTED BY THE ENGINEER, AND SHOULD NOT BE LOCATED BEHIND VEHICLE STOP LINES, EXISTING LIGHT POLES, FIRE HYDRANTS, OR OTHER ITEMS. THE RAMP SHOULD BE LOCATED IN A STABLE, UNOBSTRUCTED, STABLE, FIRM, AND SLIP RESISTANT PATH CONNECTING ALL ACCESSIBLE ELEMENTS OF A FACILITY THAT CAN BE APPROACHED, ENTERED AND USED BY PEDESTRIANS.
8. RAMPS MAY BE PLACED ON RADIAL OR TANGENTIAL SECTIONS PROVIDED THAT THE CURB OPENING IS PLACED WITHIN THE LIMITS OF THE CROSSWALK AND PROVIDE SLOPE ≤ 1:12 IN THE CONNECTION OF THE CURB OPENING IS PERPENDICULAR TO THE CURB.
9. TYPICAL CONCRETE SIDEWALK IS 4" THICK. WHEN THE ENTRANCE RADII CANNOT ACCOMMODATE THE TURNING REQUIREMENTS OF ANTICIPATED HEAVY TRUCK TRAFFIC, REFER TO STANDARD CG-13, COMMERCIAL ENTRANCE (HEAVY TRUCK TRAFFIC) FOR CONCRETE DEPTH.
10. WHEN CURB RAMPS ARE USED IN CONJUNCTION WITH A SHARED USE PATH, THE MINIMUM WIDTH SHALL BE THE WIDTH OF THE SHARED USE PATH.
11. WHEN ONE 4' WIDE CURB RAMP IS PROVIDED FOR TWO CROSSWALKS DIAGONALLY, A 4' X 4' LANDING AREA SHALL BE PROVIDED TO MANEUVER WHEELCHAIRS INTO THE CROSSWALK WITHOUT GOING INTO THE TRAVELWAY. THIS 4' x 4' LANDING AREA MAY INCLUDE THE GUTTER PAN.
12. ALL CASES WHERE CURB RAMPS INTERSECT A RADIUS SECTION OF CURB AT ENTRANCES OR STREET CONNECTIONS THE DETECTABLE WARNING SURFACE SHALL HAVE A FACTORY RADIUS OR FIELD -MODIFIED AS RECOMMENDED BY THE MANUFACTURER TO MATCH THE BACK OF CURB.

NOTE: COMPONENTS OF CURB RAMPS CONSIST OF THE FOLLOWING: HYDRAULIC CEMENT SIDEWALK (DEPTH IN INCHES, AREA IN SQUARE YARDS) CURB (WHEN REQUIRED (CG-2 OR CG-3 IN LINEAR FEET) DETECTABLE WARNING SURFACE (AREA IN SQUARE YARDS) EACH OF THE ABOVE ITEMS IS A SEPARATE PAY ITEM AND SHOULD BE SUMMARIZED FOR EACH CURB CUT RAMP.

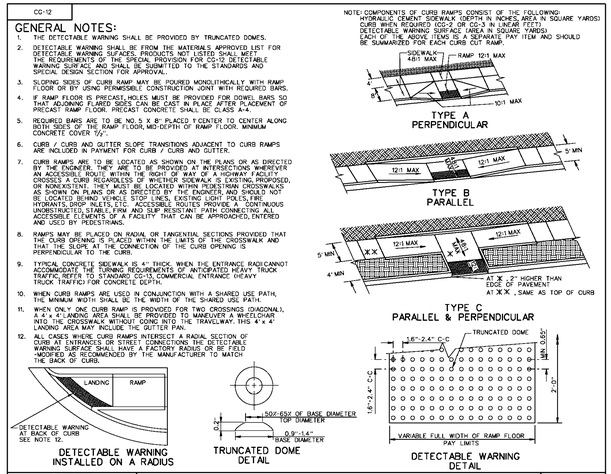

VDOT ROAD AND BRIDGE STANDARDS	CG-12 DETECTABLE WARNING SURFACE (GENERAL NOTES) VIRGINIA DEPARTMENT OF TRANSPORTATION	SPECIFICATION REFERENCE 105 502
SHEET 1 OF 5 / REVISION DATE 07/15		
203.05		

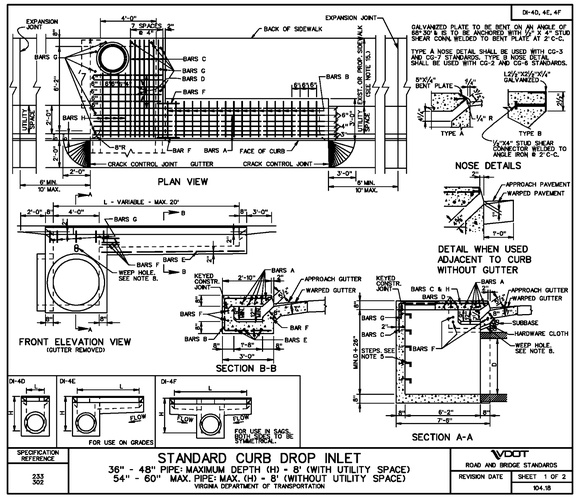

SPECIFICATION REFERENCE 233 502	STANDARD CURB DROP INLET 36" - 48" PIPE: MAXIMUM DEPTH (H) = 8' (WITH UTILITY SPACE) 54" - 60" MAX. PIPE: MAX. (H) = 8' (WITHOUT UTILITY SPACE)	VDOT ROAD AND BRIDGE STANDARDS
		REVISION DATE / SHEET 1 OF 2
	VIRGINIA DEPARTMENT OF TRANSPORTATION	104.18

2016 ROAD & BRIDGE STANDARDS

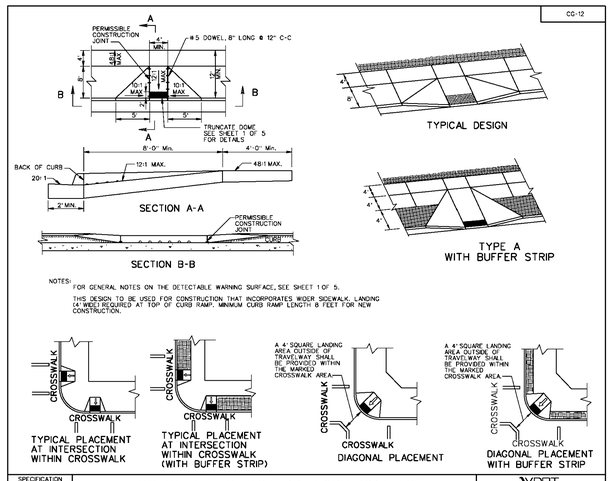

SPECIFICATION REFERENCE 105 502	CG-12 DETECTABLE WARNING SURFACE TYPE A (PERPENDICULAR) APPLICATION VIRGINIA DEPARTMENT OF TRANSPORTATION	VDOT ROAD AND BRIDGE STANDARDS
		REVISION DATE 07/15 / SHEET 2 OF 5
		203.06

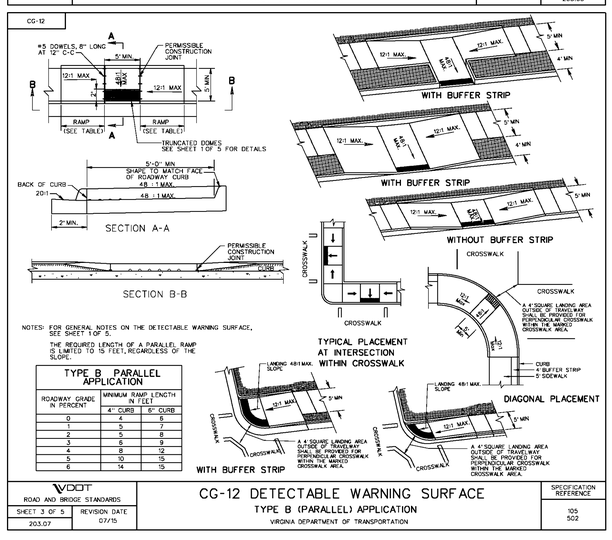

TYPE B PARALLEL APPLICATION

ROADWAY GRADE IN PERCENT	MINIMUM RAMP LENGTH IN FEET 4" CURB	6" CURB
0	4	5
1	5	7
2	5	8
3	6	9
4	8	12
5	10	15
6	14	15

VDOT ROAD AND BRIDGE STANDARDS	CG-12 DETECTABLE WARNING SURFACE TYPE B (PARALLEL) APPLICATION VIRGINIA DEPARTMENT OF TRANSPORTATION	SPECIFICATION REFERENCE 105 502
SHEET 3 OF 5 / REVISION DATE 07/15		
203.07		

2016 ROAD & BRIDGE STANDARDS

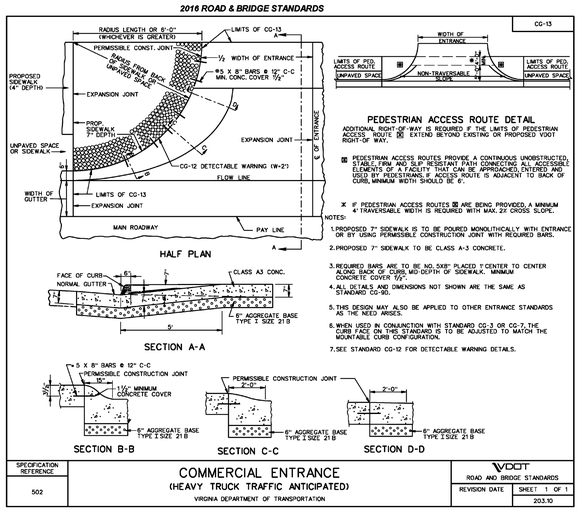

NOTES:
1. PROPOSED 7" SIDEWALK IS TO BE POURED MONOLITHICALLY WITH ENTRANCE OR BY USING PERMISSIBLE CONSTRUCTION JOINT WITH REQUIRED BARS.
2. PROPOSED 7" SIDEWALK TO BE CLASS A-3 CONCRETE.
3. REQUIRED BARS ARE TO BE NO. 5X8' PLACED 1' CENTER TO CENTER ALONG BACK OF CURB, MID-DEPTH OF SIDEWALK. MINIMUM CONCRETE COVER 1½".
4. ALL DETAILS AND DIMENSIONS NOT SHOWN ARE THE SAME AS STANDARD CG-9D.
5. THIS DESIGN MAY ALSO BE APPLIED TO OTHER ENTRANCE STANDARDS AS THE NEED ARISES.
6. WHEN USED IN CONJUNCTION WITH STANDARD CG-3 OR CG-7, THE CURB FACE ON THIS STANDARD IS TO BE ADJUSTED TO MATCH THE MOUNTABLE CURB CONFIGURATION.
7. SEE STANDARD CG-12 FOR DETECTABLE WARNING DETAILS.

SPECIFICATION REFERENCE 502	COMMERCIAL ENTRANCE (HEAVY TRUCK TRAFFIC ANTICIPATED) VIRGINIA DEPARTMENT OF TRANSPORTATION	VDOT ROAD AND BRIDGE STANDARDS
		REVISION DATE / SHEET 1 OF 1
		203.10

2016 ROAD & BRIDGE STANDARDS

CG-2

NOTES:
1. THIS ITEM MAY BE PRECAST OR CAST IN PLACE.
2. CONCRETE TO BE CLASS A3 IF CAST IN PLACE, 4000 PSI IF PRECAST.
3. CURB HAVING A RADIUS OF 300 FEET OR LESS (CG-2 TYPE C) CURB WILL BE PAID FOR AS RADIAL CURB.
4. THE DEPTH OF CURB MAY BE REDUCED AS MUCH AS 3" FROM THE DEPTH SHOWN ON PLANS OR ALSO AS MUCH AS 1½" DEEPER IN ORDER THAT THE BOTTOM OF CURB WILL COINCIDE WITH THE TOP OF A COURSE OF THE PAVEMENT SUBSTRUCTURE. OTHERWISE, THE DEPTH IS TO BE 90° AS SHOWN. NO ADJUSTMENT IN THE PRICE BID IS TO BE MADE FOR A DECREASE OR AN INCREASE IN DEPTH.
5. CG-2 IS TO BE USED ON ROADWAYS MEETING THE REQUIREMENTS FOR CG-6 AS SHOWN IN APPENDIX A OF THE VDOT ROAD DESIGN MANUAL. IN THE SECTION ON GS URBAN STANDARDS.

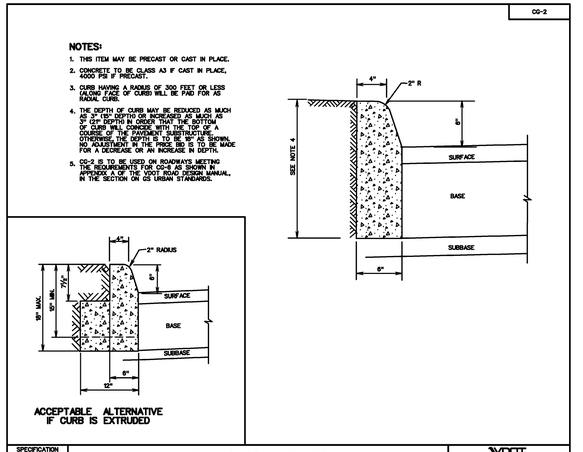

SPECIFICATION REFERENCE 105 502	STANDARD 6" CURB VIRGINIA DEPARTMENT OF TRANSPORTATION	VDOT ROAD AND BRIDGE STANDARDS
		REVISION DATE / SHEET 1 OF 1
		201.01

2016 ROAD & BRIDGE STANDARDS

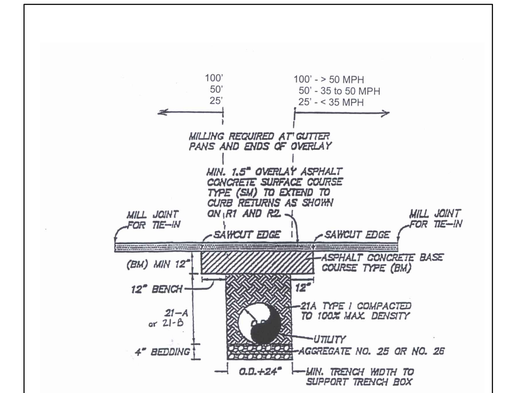

VDOT PAVEMENT REPLACEMENT DETAIL
NO SCALE

NOTE: PATCH DETAIL APPLIES TO ALL ON AND OFF SITE PIPE INSTALLATIONS WITHIN EXISTING PAVEMENT IN LEE HIGHWAY.

PIPE TRENCH PAVEMENT REPAIR
NOT TO SCALE

CG-6

NOTES:
1. THIS ITEM MAY BE PRECAST OR CAST IN PLACE.
2. CONCRETE TO BE CLASS A3 IF CAST IN PLACE, 4000 PSI IF PRECAST.
3. COMBINATION CURB & GUTTER HAVING A RADIUS OF 300 FEET OR LESS (ALONG FACE OF CURB) SHALL BE PAID FOR AS RADIAL COMBINATION CURB & GUTTER.
4. FOR USE WITH STABILIZED OPEN-GRADED DRAINAGE LAYER. THE BOTTOM OF THE CURB AND GUTTER SHALL BE CONSTRUCTED PARALLEL TO THE SLOPE OF THE STABILIZED LAYER AND TO THE DEPTH OF THE PAVEMENT.
5. ALLOWABLE CRITERIA FOR THE USE OF CG-6 IS BASED ON ROADWAY CLASSIFICATION AS SHOWN IN APPENDIX A, APPENDIX A OF THE VDOT ROAD DESIGN MANUAL.

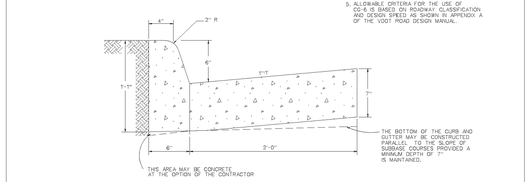

SPECIFICATION REFERENCE 105 502	COMBINATION 6" CURB & GUTTER VIRGINIA DEPARTMENT OF TRANSPORTATION	REV. 9/06
		201.03

ROUTE 7/LEESBURG PIKE ROAD FRONTAGE ONLY.

2016 ROAD & BRIDGE STANDARDS

CG-11

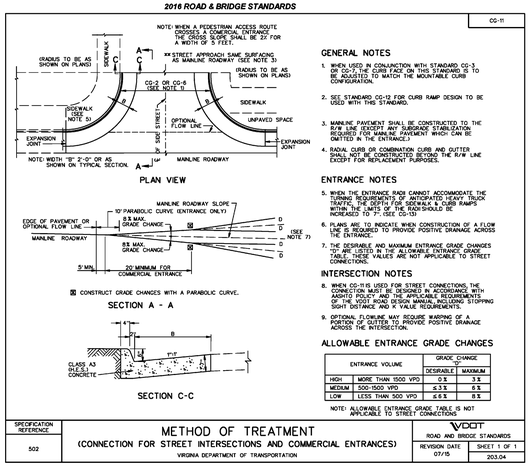

GENERAL NOTES
1. WHEN USED IN CONJUNCTION WITH STANDARD CG-3 OR CG-7, THE CURB FACE ON THIS STANDARD IS TO BE ADJUSTED TO MATCH THE MOUNTABLE CURB CONFIGURATION.
2. SEE STANDARD CG-12 FOR CURB RAMP DESIGN TO BE USED WITH THIS STANDARD.
3. MAINLINE PAVEMENT SHALL BE CONSTRUCTED TO THE R/W LINE (EXCEPT ANY SUBGRADE STABILIZATION REQUIRED FOR MAINLINE PAVEMENT WHICH CAN BE OMITTED IN THE ENTRANCE.)
4. RADIAL CURB OR COMBINATION CURB AND GUTTER SHALL NOT BE CONSTRUCTED BEYOND THE R/W LINE EXCEPT FOR REPLACEMENT PURPOSES.

ENTRANCE NOTES
5. WHEN THE ENTRANCE RADII CANNOT ACCOMMODATE THE TURNING REQUIREMENTS OF ANTICIPATED HEAVY TRUCK TRAFFIC, THE DEPTH FOR SIDEWALK & CURB RAMPS WITHIN THE LIMITS OF THE RADII SHOULD BE INCREASED TO 7", SEE CG-13.
6. PLANS ARE TO INDICATE WHEN CONSTRUCTION OF A FLOW LINE IS REQUIRED TO PROVIDE POSITIVE DRAINAGE ACROSS THE ENTRANCE.
7. THE DESIRABLE AND MAXIMUM ENTRANCE GRADE CHANGES ARE GIVEN IN THE ALLOWABLE ENTRANCE GRADE CHANGES. THESE VALUES ARE NOT APPLICABLE TO STREET CONNECTIONS.

INTERSECTION NOTES
8. WHEN CG-11 IS USED FOR STREET CONNECTIONS, THE CONNECTION MUST BE DESIGNED IN ACCORDANCE WITH AASHTO POLICY AND THE APPLICABLE REQUIREMENTS OF THE VDOT ROAD DESIGN MANUAL, INCLUDING STOPPING SIGHT DISTANCE AND K VALUE REQUIREMENTS.
9. OPTIONAL FLOWLINE MAY REQUIRE WARPING OF A PORTION OF GUTTER TO PROVIDE POSITIVE DRAINAGE ACROSS THE INTERSECTION.

ALLOWABLE ENTRANCE GRADE CHANGES

ENTRANCE VOLUME		GRADE CHANGE DESIRABLE	MAXIMUM
HIGH	MORE THAN 1500 VPD	0 % ≤ 3 %	3 % 6 %
MEDIUM	500-1500 VPD	≤ 3 % ≤ 6 %	6 % 8 %
LOW	LESS THAN 500 VPD		

NOTE: ALLOWABLE ENTRANCE GRADE TABLE IS NOT APPLICABLE TO STREET CONNECTIONS

SPECIFICATION REFERENCE 502	METHOD OF TREATMENT (CONNECTION FOR STREET INTERSECTIONS AND COMMERCIAL ENTRANCES) VIRGINIA DEPARTMENT OF TRANSPORTATION	VDOT ROAD AND BRIDGE STANDARDS
		REVISION DATE 07/15 / SHEET 1 OF 1
		203.04

VDOT GENERAL NOTES

REVISED 3/28/13

1. THESE PLANS WERE PREPARED IN ACCORDANCE WITH THE REQUIREMENTS OF (SELECT ONE):
   - [ ] VDOT SUBDIVISION STREET REQUIREMENTS (SSR 24VAC-30-91 EFFECTIVE JANUARY 1, 2005 AND VDOT ROAD DESIGN MANUAL APPENDIX B)
   - [ ] VDOT SECONDARY STREET ACCEPTANCE REQUIREMENTS (SSAR 24VAC-30-92 EFFECTIVE MARCH 9, 2009 AND VDOT ROAD DESIGN MANUAL APPENDIX B1). SCHEMATIC STREET LAYOUT AND COMPUTATIONS OF CONNECTIVITY INDEX ARE PROVIDED WITH THESE PLANS PER 24VAC30-92-60.
   - [X] VDOT SECONDARY STREET ACCEPTANCE REQUIREMENTS (SSAR 24VAC-30-92 EFFECTIVE DECEMBER 31, 2011 AND VDOT ROAD DESIGN MANUAL APPENDIX B1). SCHEMATIC STREET LAYOUT WITH PHASING DIAGRAM FOR STREET ACCEPTANCE ARE PROVIDED WITH THESE PLANS PER 24VAC30-92-60.
2. METHODS AND MATERIALS USED SHALL CONFORM TO CURRENT COUNTY/TOWN AND VDOT STANDARDS AND SPECIFICATIONS.
3. ALL UTILITIES, INCLUDING ALL POLES, ARE TO BE RELOCATED AT THE DEVELOPER'S EXPENSE, PRIOR TO CONSTRUCTION.
4. OPEN CUTTING OF PAVED OR SURFACE TREATED ROADS IS NOT PERMITTED. ALL UTILITIES WHICH WILL BE PLACED UNDER EXISTING STREETS ARE TO BE BORED OR JACKED. ANY EXCEPTIONS, DUE TO EXTENUATING CIRCUMSTANCES, ARE TO BE ADDRESSED AT THE PERMIT STAGE.
5. ANY TYPE OF REVERSE CURB (SPILL CURB, CG-6R, ETC.) AND TRANSITION TO THESE CURBS SHALL NOT BE USED WITH THE PUBLIC RIGHT OF WAY.
6. THE DEVELOPER IS RESPONSIBLE FOR ANY DAMAGE TO EXISTING ROADS AND UTILITIES WHICH OCCUR AS A RESULT OF PROJECT CONSTRUCTION WITHIN OR CONTIGUOUS TO EXISTING RIGHT OF WAY.
7. A SMOOTH GRADE SHALL BE MAINTAINED FROM THE CENTERLINE OF THE EXISTING ROAD TO THE PROPOSED EDGE OF PAVEMENT TO PRECLUDE THE FORMING OF FALSE GUTTERS AND/OR THE PONDING OF ANY WATER IN THE ROADWAY.
8. STANDARD GUARDRAILS AND/OR HANDRAILS SHALL BE INSTALLED AT HAZARDOUS LOCATIONS AS DESIGNATED DURING FIELD REVIEW BY THE COUNTY/TOWN INSPECTOR OR VDOT.
9. THE DEVELOPER IS RESPONSIBLE FOR ALL TRAFFIC CONTROL. THE DEVELOPER SHALL SUBMIT A SIGNING, STRIPING AND/OR SIGNALIZATION PLAN TO THE VDOT LAND DEVELOPMENT SECTION A MINIMUM OF THIRTY DAYS PRIOR TO PERMIT APPLICATION. THE DEVELOPER SHALL NOT COMMENCE CONSTRUCTION OF ANY PAVEMENT COURSE WITHOUT AN APPROVED STRIPING PLAN.
10. PAVEMENT DESIGN IS BASED ON AN ASSUMED CBR VALUE OF 10 (USE CBR VALUE OF 6 IN LOUDOUN CO). SOIL TESTS OF SUBGRADE MUST BE SUBMITTED FOR ACTUAL DETERMINATION OF REQUIRED THICKNESS OF THE PAVEMENT INCLUDING LAYERS OF ASPHALT AND SUBBASE PRIOR TO SUBBASE PLACEMENT.
11. ALL UNTREATED AGGREGATE USED IN BASE OR SUBBASE COURSES SHALL BE 21B, EXCEPT ON ROADS WITH ADT OF 1000 VPD OR LESS, WHERE 21A AGGREGATE MAY BE USED. WHEN 21B AGGREGATE IS USED, UD-4 UNDERDRAINS MUST BE PROVIDED.
12. A 4' (MIN.) LAYER OF STONE IS REQUIRED BENEATH CURB AND GUTTER (MAY BE SHOWN ON TYPICAL SECTION IN LIEU OF A NOTE).
13. ADDITIONAL DITCH LININGS OR SILTATION AND EROSION CONTROL MEASURES SHALL BE PROVIDED, AT THE DEVELOPER'S EXPENSE, AS DETERMINED NECESSARY BY VDOT AND/OR THE COUNTY/TOWN DURING FIELD REVIEW. ALL COSTS SHALL BE ASSUMED BY THE DEVELOPER.
14. THE ENTIRE SURFACE OF THE ROADWAY (OLD AND NEW PORTIONS) SHALL BE OVERLAID AND RE-STRIPED AS REQUIRED BY VDOT PERSONNEL. OVERLAY OF EXISTING PAVEMENT SHALL BE MINIMUM OF 1.25' DEPTH; ANY COSTS ASSOCIATED WITH PAVEMENT OVERLAY, OR THE MILLING OF EXISTING PAVEMENT TO OBTAIN REQUIRED DEPTH, SHALL BE ASSUMED BY THE DEVELOPER.
15. DEVELOPER IS RESPONSIBLE FOR DESIGN AND CONSTRUCTION OF ANY TRAFFIC SIGNAL INSTALLATION OR MODIFICATION WHICH WILL BE NECESSARY AS A RESULT OF DEVELOPMENT OF THIS SITE.
16. ALL RIGHT OF WAY DEDICATED TO PUBLIC USE SHALL BE CLEAR AND UNENCUMBERED.
17. THE COUNTY/TOWN SHALL OBTAIN A PERMIT FOR ALL SIDEWALKS WITHIN THE RIGHT OF WAY THAT DO NOT QUALIFY FOR VDOT MAINTENANCE.
18. TRAFFIC CONTROL DEVICES OR ADVISORY SIGNS, SUCH AS MULTIWAY STOPS, SPEED LIMITS, WATCH FOR CHILDREN, PEDESTRIAN TRAFFIC ETC., SHALL NOT BE INSTALLED UNLESS SPECIFICALLY SHOWN ON THESE PLANS OR A VDOT APPROVED PLAN REVISION. SPEED STUDY CERTIFIED BY PROFESSIONAL ENGINEER SHOULD BE SUBMITTED FOR VDOT APPROVAL PRIOR TO THE STREET ACCEPTANCE FOR ANY ROAD TO BE POSTED OTHER THAN THE STATUTORY SPEED LIMIT. SHOULD UNAPPROVED SIGNS BE NOTED AT THE TIME OF VDOT INSPECTION, THE ROAD ACCEPTANCE PROCESS SHALL BE TERMINATED IMMEDIATELY AND NOT RECOMMENCED UNTIL A DETERMINATION IS MADE REGARDING THE APPROVAL OF ANY ADDITIONAL SIGNS. IMMEDIATE REMOVAL OF SUCH SIGNS SHALL NOT NEGATE THE NEED FOR THE SUBMISSION OF A REVISION.
19. LANDSCAPING AND IRRIGATION SYSTEMS SHALL NOT BE INSTALLED WITHIN THE PUBLIC RIGHT OF WAY EXCEPT AS SHOWN ON THESE PLANS OR A VDOT APPROVED REVISION.
20. BEGINNING JULY 1, 2009 ALL LAND USE PERMIT APPLICATIONS ARE REQUIRED TO PROVIDE AT LEAST ONE (1) PERSON WHO, AT MINIMUM, IS VERIFIED BY VDOT IN BASIC WORK ZONE TRAFFIC CONTROL FOR ALL PERMITTED ACTIVITIES WITHIN STATE MAINTAINED RIGHT OF WAY WHICH INVOLVES INSTALLING, MAINTAINING, OR REMOVING WORK ZONE TRAFFIC CONTROL DEVICES. THIS PERSON SHALL BE RESPONSIBLE FOR THE PLACEMENT, MAINTENANCE AND REMOVAL OF ALL WORK ZONE TRAFFIC CONTROL DEVICES.

WALTER L. PHILLIPS INCORPORATED
ESTABLISHED 1945
Engineers • Surveyors • Planners
Landscape Architects • Arborists
207 PARK AVENUE
FALLS CHURCH, VIRGINIA 22046
(703) 532-6163 Fax (703) 533-1301
WWW.WLPINC.com
COMMONWEALTH OF VIRGINIA PROFESSIONAL ENGINEER
KAREN L. S. WHITE Lic. No.041850
6/08/2020

DRAWN: AH/KW/ TT
CHECKED: KW
SCALE: NONE
DATE: SESP PRE-SUBD1 5/15/2020, SESP SUBD1 06/08/2020

NO.	DESCRIPTION	DATE	REV. BY	APPROVED	DATE

REVISION APPROVED BY N/A

NOTE: THE VERTICAL DATUM REFERENCED ON THIS PLAN IS THE NORTH AMERICAN DATUM OF 1988 (NAVD88)

VDOT NOTES AND DETAILS

WEST FALLS CHURCH ECONOMIC DEVELOPMENT

SPECIAL EXCEPTION SITE PLAN

CITY OF FALLS CHURCH, VIRGINIA

SHEET: C-0211

CURVE TABLE

CURVE	RADIUS	LENGTH	DELTA	TANGENT	CHORD	CHORD BEARING
C1	25.00'	27.36'	62°42'16"	15.23'	26.01'	N75°29'08"W
C2	61.47'	102.47'	95°30'57"	67.69'	91.01'	N09°06'27"W
C3	347.65'	55.99'	9°13'38"	28.05'	55.93'	N52°15'06"W
C4	522.96'	124.97'	13°41'31"	62.78'	124.67'	N04°30'15"W
C5	359.26'	55.38'	8°49'53"	27.74'	55.32'	N06°45'27"E
C6	347.65'	48.98'	8°04'21"	24.53'	48.94'	N62°03'10"E
C7	5670.71'	354.51'	3°34'55"	177.31'	354.46'	N67°52'48"E
C7A	5670.71'	292.22'	2°57'09"	146.14'	292.19'	N67°33'55"E
C7B	5670.71'	62.29'	0°37'46"	31.15'	62.29'	N69°21'23"E

VCS 1988 - NORTH ZONE

LEGEND

CURB & GUTTER CG-2
TRANSITION FROM CG-6 TO CG-6R
SANITARY SEWER
SANITARY LATERAL
CLEAN OUT
STORM SEWER
WATER MAIN
FIRE HYDRANT
PLUG
OVERHEAD WIRES
UTILITY POLE
UNDERGROUND ELECTRIC
TELEPHONE
GAS MAIN
ELECTRICAL
TRANSFORMER
HANDICAP RAMP (CG-12)
GUARDRAIL
FENCE
TRAFFIC FLOW
LIGHT
DOOR
TREES
CONTOURS
SPOT ELEVATION
DRAINAGE FLOW DIRECTION
TOP OF CURB
BOTTOM OF CURB
TOP OF WALL
BOTTOM OF WALL
HIGH POINT
TEST PIT
LIMITS OF PROJECT

NOTE: CONTOURS BASED ON VERTICAL DATUM NAVD 1988.

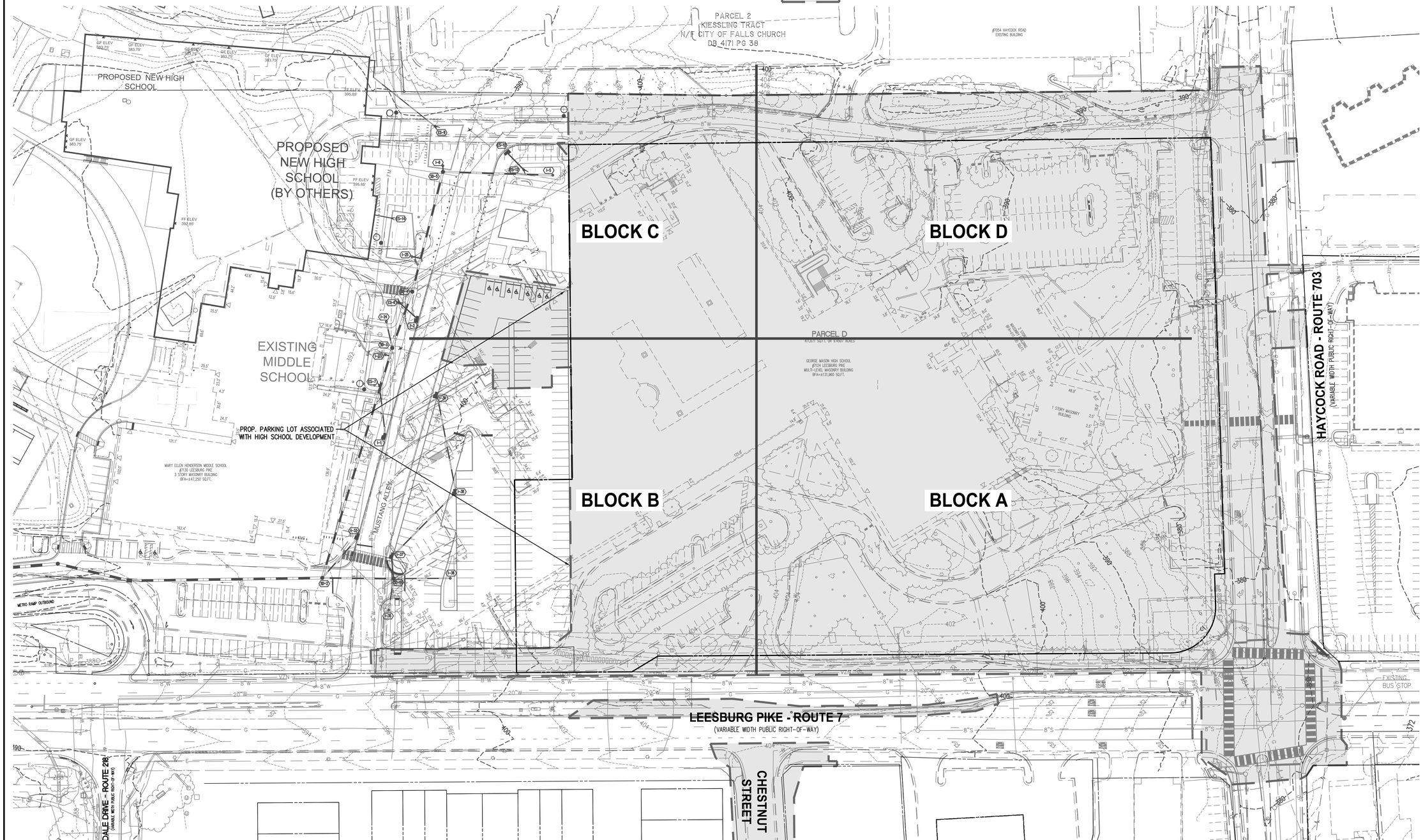

Engineers • Surveyors • Planners
Landscape Architects • Arborists
207 PARK AVENUE
FALLS CHURCH, VIRGINIA 22046
(703) 532-6163 Fax (703) 533-1301
www.WLPINC.com
WALTER L. PHILLIPS INCORPORATED
ESTABLISHED 1945

DATE: SESP PRE-SUB01 5/15/2020, SESP SUB01 06/08/2020
SCALE: 1" = 50'
DRAWN: AI / KW / TT
CHECKED: KW

COMMONWEALTH OF VIRGINIA
KAREN L. S. WHITE
Lic. No.041850
6/08/2020
PROFESSIONAL ENGINEER

REVISION APPROVED BY					
NO.	DESCRIPTION	DATE	REV. BY	APPROVED	DATE

NOTE: THE VERTICAL DATUM REFERENCED ON THIS PLAN IS THE NORTH AMERICAN DATUM OF 1988 (NAVD88)

EXISTING CONDITIONS PLAN - OVERALL

WEST FALLS CHURCH ECONOMIC DEVELOPMENT

SPECIAL EXCEPTION SITE PLAN
CITY OF FALLS CHURCH, VIRGINIA

LEGEND

AC..... AIR CONDITIONER
APPROX.LOC..... APPROXIMATE LOCATION
ASPH..... ASPHALT
BFA..... BUILDING FOOTPRINT AREA
CFC..... CITY OF FALLS CHURCH
CLF..... CHAINLINK FENCE
CO..... CLEANOUT
CONC..... CONCRETE
DB..... DEED BOOK
EHH..... ELECTRIC HANDHOLE
EM..... ELECTRIC METER
ENTR..... ENTRANCE
EP..... EDGE OF PAVEMENT
ESMT..... EASEMENT
EHH..... ELECTRIC HANDHOLE
FC..... HEADER CURB
FDC..... FIRE DEPARTMENT CONNECTION
FP..... FLAG POLE
GEN..... GENERATOR
GM..... GAS METER
GV..... GAS VALVE
GVP..... GAS VENT PIPE
HGT..... HEIGHT
HW..... HEADWALL (STORM)
IPF..... IRON PIN FOUND (PROPERTY CORNER)
IPS..... IRON PIN SET (PROPERTY CORNER)
JB..... JUNCTION BOX
N/F..... NOW OR FORMERLY
PG..... PAGE
POB..... POINT OF BEGINNING
RET..... RETAINING WALL
SD.(123)..... STORM SEWER STRUCTURE
SMH.(123)..... SANITARY SEWER STRUCTURE
SN..... SIGN
SQ.FT..... SQUARE FEET
SW..... SIDEWALK
TCB..... TRAFFIC CONTROL BOX
TD..... TRENCH DRAIN
TRANS..... ELECTRIC TRANSFORMER
TRLP..... TRAFFIC LIGHT/SIGNAL POLE
TSA..... TRAFFIC SIGNAL ARM
UHH..... UTILITY HANDHOLE
WM..... WATER METER
WV..... WATER VALVE
..... FIRE HYDRANT
..... DOORWAY/ENTRANCE
..... UTILITY POLE
..... LIGHT POLE
..... TELECOMMUNICATIONS PEDESTAL
—X—..... FENCE
..... GUY WIRE
..... OVERHEAD WIRES
..... CURB AND GUTTER
..... BOLLARD
..... POST
..... SIGN
..... ELECTRIC MANHOLE
..... TELECOMMUNICATIONS MANHOLE
..... UTILITY MANHOLE
..... WATER MANHOLE
..... RESERVED FOR HANDICAPPED

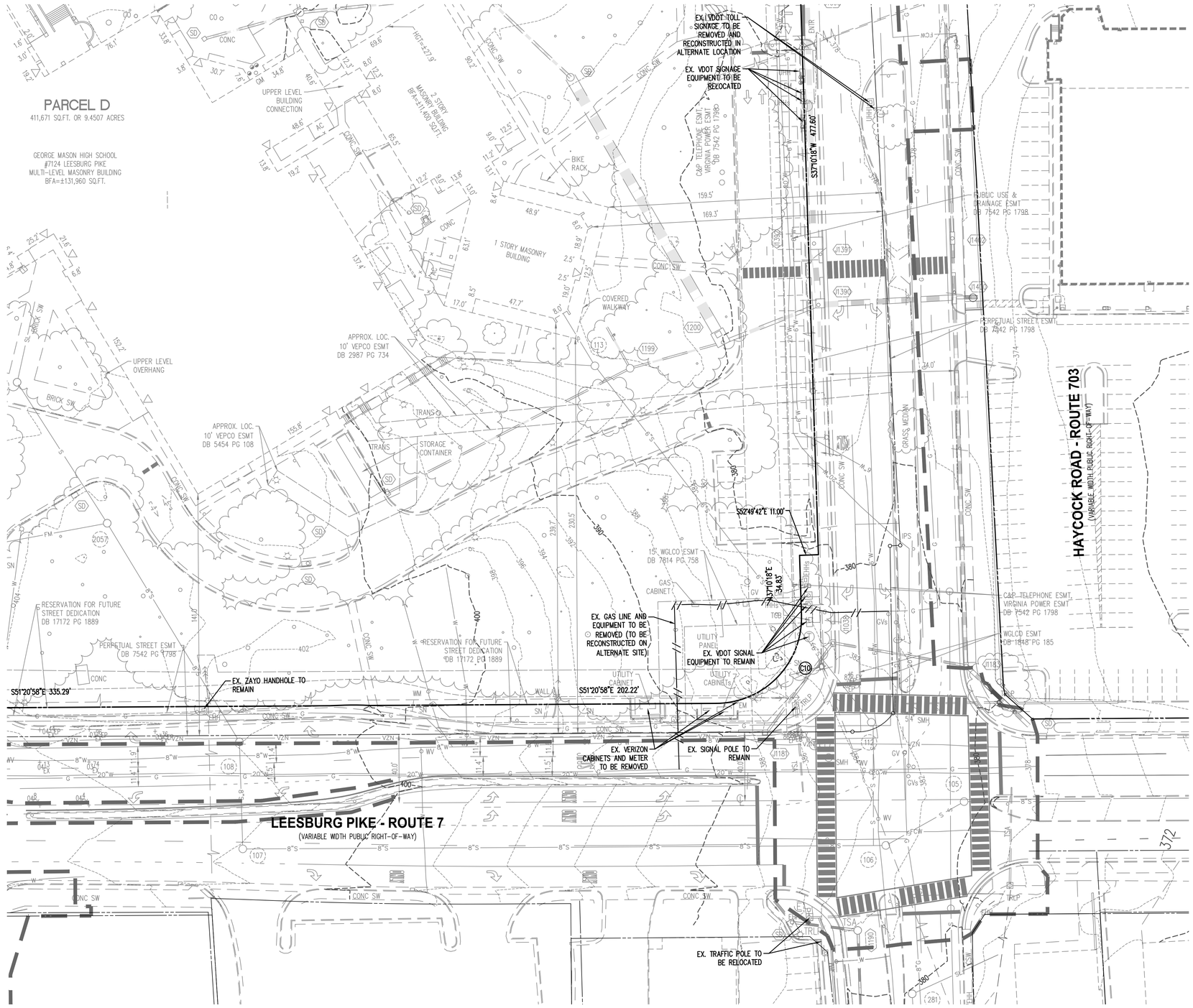

30 0 15 30 60 120
(IN FEET)
1 INCH = 30'

Engineers • Surveyors • Planners
Landscape Architects • Arborists
207 PARK AVENUE
FALLS CHURCH, VIRGINIA 22046
(703) 532-6163 Fax (703) 533-1301
www.WLPINC.com

WALTER L. PHILLIPS INCORPORATED
ESTABLISHED 1945

COMMONWEALTH OF VIRGINIA
KAREN L. S. WHITE
Lic. No.041850
6/08/2020
PROFESSIONAL ENGINEER

DRAWN: AI/KW/ TT
CHECKED: KW
SCALE: 1" = 30'
DATE: SESP PRE-SUB01 5/15/2020, SESP SUB01 06/08/2020

REVISION APPROVED BY:

NO.	DESCRIPTION	DATE	REV. BY	APPROVED	DATE

NOTE: THE VERTICAL DATUM REFERENCED ON THIS PLAN IS THE NORTH AMERICAN DATUM OF 1988 (NAVD88)

EXISTING CONDITIONS PLAN - BLOCK A

WEST FALLS CHURCH ECONOMIC DEVELOPMENT

SPECIAL EXCEPTION SITE PLAN
CITY OF FALLS CHURCH, VIRGINIA

File No. CB-9 Tax Map No. 40-3 Job No. 13-016 Cadd Dwg. File: Q:\sdskproj\13016\dwg\Engineering\Plans\SESP\13016C-0302.dwg Xref: SESP/13016B-0002

SHEET: C-0302

LEGEND

AC	AIR CONDITIONER
APPROX.LOC	APPROXIMATE LOCATION
ASPH	ASPHALT
BFA	BUILDING FOOTPRINT AREA
CFC	CITY OF FALLS CHURCH
CLF	CHAINLINK FENCE
CO	CLEANOUT
CONC	CONCRETE
DB	DEED BOOK
EHH	ELECTRIC HANDHOLE
EM	ELECTRIC METER
ENTR	ENTRANCE
EP	EDGE OF PAVEMENT
ESMT	EASEMENT
EHH	ELECTRIC HANDHOLE
FC	HEADER CURB
FDC	FIRE DEPARTMENT CONNECTION
FP	FLAG POLE
GEN	GENERATOR
GM	GAS METER
GV	GAS VALVE
GVP	GAS VENT PIPE
HGT	HEIGHT
HW	HEADWALL (STORM)
IPF	IRON PIN FOUND (PROPERTY CORNER)
IPS	IRON PIN SET (PROPERTY CORNER)
JB	JUNCTION BOX
N/F	NOW OR FORMERLY
PG	PAGE
POB	POINT OF BEGINNING
RET	RETAINING WALL
SD, 123	STORM SEWER STRUCTURE
SMH, 123	SANITARY SEWER STRUCTURE
SN	SIGN
SQ.FT	SQUARE FEET
SW	SIDEWALK
TCB	TRAFFIC CONTROL BOX
TD	TRENCH DRAIN
TRANS	ELECTRIC TRANSFORMER
TRLP	TRAFFIC LIGHT/SIGNAL POLE
TSA	TRAFFIC SIGNAL ARM
UHH	UTILITY HANDHOLE
WM	WATER METER
WV	WATER VALVE
◇	FIRE HYDRANT
△	DOORWAY/ENTRANCE
⌀	UTILITY POLE
☼	LIGHT POLE
T	TELECOMMUNICATIONS PEDESTAL
—X—	FENCE
—→	GUY WIRE
	OVERHEAD WIRES
	CURB AND GUTTER
	BOLLARD
⊗	POST
	SIGN
E	ELECTRIC MANHOLE
T	TELECOMMUNICATIONS MANHOLE
U	UTILITY MANHOLE
W	WATER MANHOLE
	RESERVED FOR HANDICAPPED

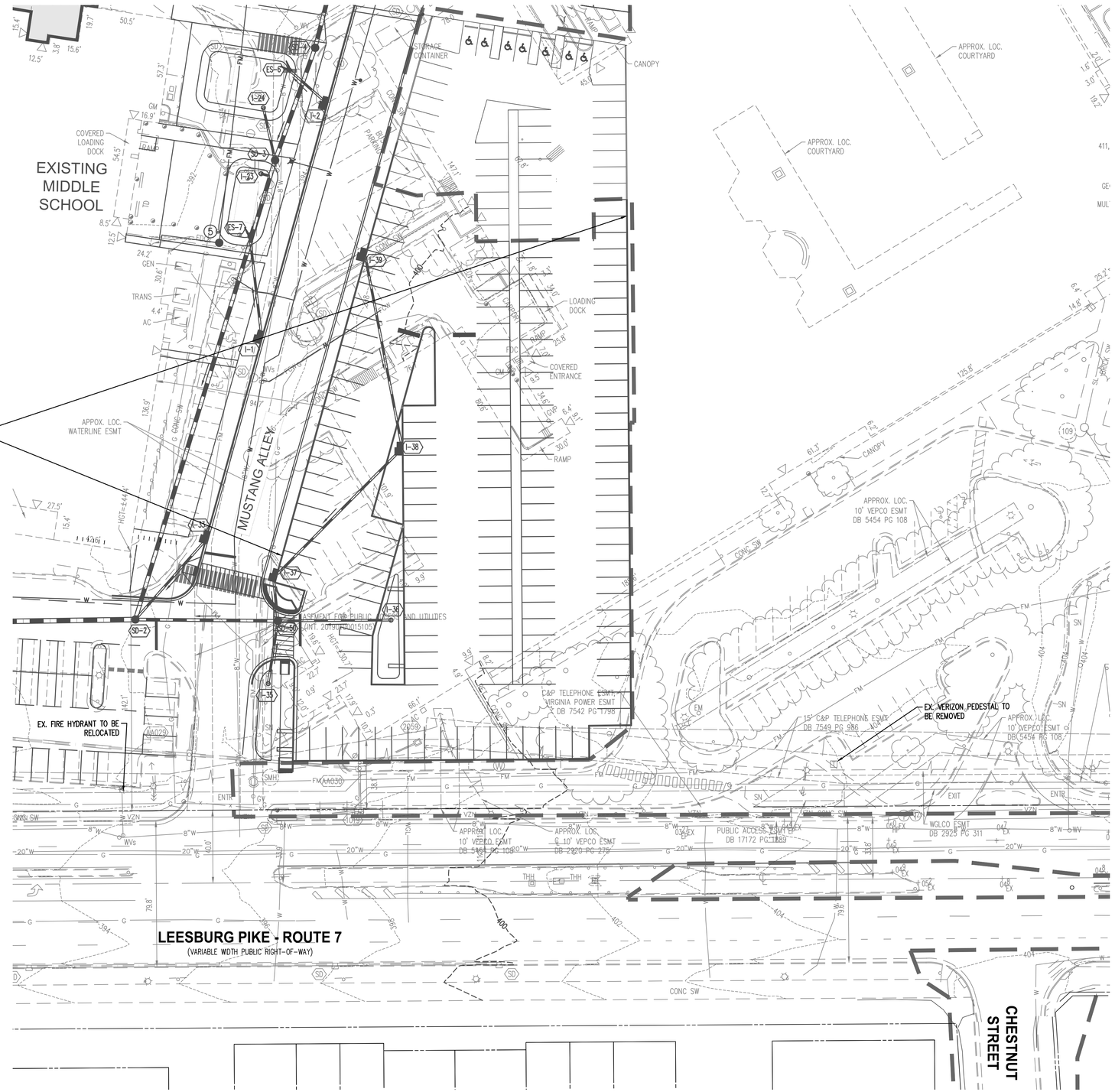

30 0 15 30 60 120
(IN FEET)
1 INCH = 30'

EXISTING CONDITIONS PLAN - BLOCK B

WEST FALLS CHURCH ECONOMIC DEVELOPMENT

SPECIAL EXCEPTION SITE PLAN
CITY OF FALLS CHURCH, VIRGINIA

WALTER L. PHILLIPS INCORPORATED
ESTABLISHED 1945
Engineers • Surveyors • Planners
Landscape Architects • Arborists
207 PARK AVENUE
FALLS CHURCH, VIRGINIA 22046
(703) 532-6163 Fax (703) 533-1301
www.WLPINC.com

SCALE: 1" = 30'
DATE: SESP PRE-SUB01 5/15/2020, SESP SUB01 06/08/2020
DRAWN: AJ / KW / TT
CHECKED: KW

COMMONWEALTH OF VIRGINIA
KAREN L. S. WHITE
Lic. No. 041850
6/08/2020
PROFESSIONAL ENGINEER

REVISION APPROVED BY

NO.	DESCRIPTION	DATE	REV. BY	APPROVED	DATE

NOTE: THE VERTICAL DATUM REFERENCED ON THIS PLAN IS THE NORTH AMERICAN DATUM OF 1988 (NAVD88)

File No. CB-9 Tax Map No. 40-3 Job No. 13-016 Cadd Dwg. File: Q:\sdskproj\13016\dwg\Engineering\Plans\SESP\13016C-0302.dwg Xref: SESP/13016B-0002

SHEET: C-0303

LEGEND

AC..... AIR CONDITIONER
APPROX.LOC..... APPROXIMATE LOCATION
ASPH..... ASPHALT
BFA..... BUILDING FOOTPRINT AREA
CFC..... CITY OF FALLS CHURCH
CLF..... CHAINLINK FENCE
CO..... CLEANOUT
CONC..... CONCRETE
DB..... DEED BOOK
EHH..... ELECTRIC HANDHOLE
EM..... ELECTRIC METER
ENTR..... ENTRANCE
EP..... EDGE OF PAVEMENT
ESMT..... EASEMENT
EHH..... ELECTRIC HANDHOLE
FC..... HEADER CURB
FDC..... FIRE DEPARTMENT CONNECTION
FP..... FLAG POLE
GEN..... GENERATOR
GM..... GAS METER
GV..... GAS VALVE
GVP..... GAS VENT PIPE
HGT..... HEIGHT
HW..... HEADWALL (STORM)
IPF..... IRON PIN FOUND (PROPERTY CORNER)
IPS..... IRON PIN SET (PROPERTY CORNER)
JB..... JUNCTION BOX
N/F..... NOW OR FORMERLY
PG..... PAGE
POB..... POINT OF BEGINNING
RET..... RETAINING WALL
SD..... STORM SEWER STRUCTURE
SMH..... SANITARY SEWER STRUCTURE
SN..... SIGN
SQ.FT..... SQUARE FEET
SW..... SIDEWALK
TCB..... TRAFFIC CONTROL BOX
TD..... TRENCH DRAIN
TRANS..... ELECTRIC TRANSFORMER
TRLP..... TRAFFIC LIGHT/SIGNAL POLE
TSA..... TRAFFIC SIGNAL ARM
UHH..... UTILITY HANDHOLE
WM..... WATER METER
WV..... WATER VALVE
..... FIRE HYDRANT
..... DOORWAY/ENTRANCE
..... UTILITY POLE
..... LIGHT POLE
..... TELECOMMUNICATIONS PEDESTAL
..... FENCE
..... GUY WIRE
..... OVERHEAD WIRES
..... CURB AND GUTTER
..... BOLLARD
..... POST
..... SIGN
..... ELECTRIC MANHOLE
..... TELECOMMUNICATIONS MANHOLE
..... UTILITY MANHOLE
..... WATER MANHOLE
..... RESERVED FOR HANDICAPPED

30 0 15 30 60 120
(IN FEET)
1 INCH = 30'

WALTER L. PHILLIPS INCORPORATED
ESTABLISHED 1945
Engineers • Surveyors • Planners
Landscape Architects • Arborists
207 PARK AVENUE
FALLS CHURCH, VIRGINIA 22046
(703) 532-6163 Fax (703) 533-1301
www.WLPINC.com

COMMONWEALTH OF VIRGINIA
KAREN L. S. WHITE
Lic. No.041850
6/08/2020
PROFESSIONAL ENGINEER

SCALE: 1" = 30'
DATE: SESP PRE-SUB01 5/15/2020, SESP SUB01 06/08/2020
DRAWN: AI1/KW/ TT
CHECKED: KW

NO.	DESCRIPTION	DATE	REV'. BY	APPROVED	DATE

REVISION APPROVED BY:

NOTE: THE VERTICAL DATUM REFERENCED ON THIS PLAN IS THE NORTH AMERICAN DATUM OF 1988 (NAVD88)

EXISTING CONDITIONS PLAN - BLOCK C

WEST FALLS CHURCH ECONOMIC DEVELOPMENT

SPECIAL EXCEPTION SITE PLAN
CITY OF FALLS CHURCH, VIRGINIA

SHEET: C-0304

LEGEND

AC..... AIR CONDITIONER
APPROX.LOC..... APPROXIMATE LOCATION
ASPH..... ASPHALT
BFA..... BUILDING FOOTPRINT AREA
CFC..... CITY OF FALLS CHURCH
CLF..... CHAINLINK FENCE
CO..... CLEANOUT
CONC..... CONCRETE
DB..... DEED BOOK
EHH..... ELECTRIC HANDHOLE
EM..... ELECTRIC METER
ENTR..... ENTRANCE
EP..... EDGE OF PAVEMENT
ESMT..... EASEMENT
EHH..... ELECTRIC HANDHOLE
FC..... HEADER CURB
FDC..... FIRE DEPARTMENT CONNECTION
FP..... FLAG POLE
GEN..... GENERATOR
GM..... GAS METER
GV..... GAS VALVE
GVP..... GAS VENT PIPE
HGT..... HEIGHT
HW..... HEADWALL (STORM)
IPF..... IRON PIN FOUND (PROPERTY CORNER)
IPS..... IRON PIN SET (PROPERTY CORNER)
JB..... JUNCTION BOX
N/F..... NOW OR FORMERLY
PG..... PAGE
POB..... POINT OF BEGINNING
RET..... RETAINING WALL
SD..... STORM SEWER STRUCTURE
SMH..... SANITARY SEWER STRUCTURE
SN..... SIGN
SQ.FT..... SQUARE FEET
SW..... SIDEWALK
TCB..... TRAFFIC CONTROL BOX
TD..... TRENCH DRAIN
TRANS..... ELECTRIC TRANSFORMER
TRLP..... TRAFFIC LIGHT/SIGNAL POLE
TSA..... TRAFFIC SIGNAL ARM
UHH..... UTILITY HANDHOLE
WM..... WATER METER
WV..... WATER VALVE
..... FIRE HYDRANT
..... DOORWAY/ENTRANCE
..... UTILITY POLE
..... LIGHT POLE
..... TELECOMMUNICATIONS PEDESTAL
—X—..... FENCE
..... GUY WIRE
..... OVERHEAD WIRES
..... CURB AND GUTTER
..... BOLLARD
..... POST
..... SIGN
..... ELECTRIC MANHOLE
..... TELECOMMUNICATIONS MANHOLE
..... UTILITY MANHOLE
..... WATER MANHOLE
..... RESERVED FOR HANDICAPPED

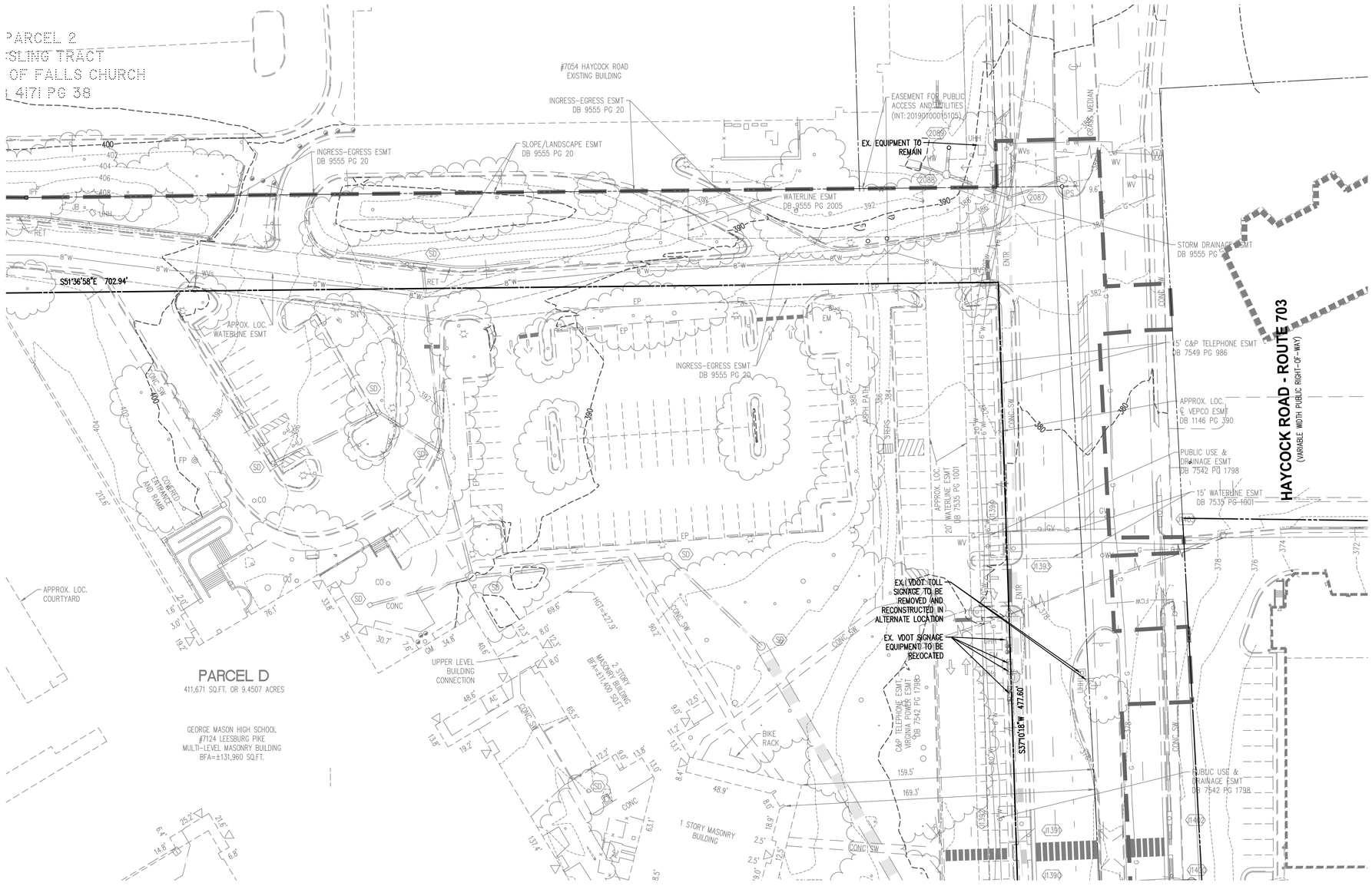

30 0 15 30 60 120
(IN FEET)
1 INCH = 30'

Engineers • Surveyors • Planners
Landscape Architects • Arborists
207 PARK AVENUE
FALLS CHURCH, VIRGINIA 22046
(703) 532-6163 Fax (703) 533-1301
www.WLPINC.com

WALTER L. PHILLIPS INCORPORATED
ESTABLISHED 1945

DATE: SESP PRE-SUB01 5/15/2020, SESP SUB01 06/08/2020
SCALE: 1" = 30'
DRAWN: AH/KW/ TT
CHECKED: KW

COMMONWEALTH OF VIRGINIA
KAREN L. S. WHITE
Lic. No.041850
6/08/2020
PROFESSIONAL ENGINEER

REVISION APPROVED BY			
NO.	DESCRIPTION	DATE	REV. BY

APPROVED	DATE

NOTE: THE VERTICAL DATUM REFERENCED ON THIS PLAN IS THE NORTH AMERICAN DATUM OF 1988 (NAVD88)

EXISTING CONDITIONS PLAN - BLOCK D

WEST FALLS CHURCH ECONOMIC DEVELOPMENT

SPECIAL EXCEPTION SITE PLAN

CITY OF FALLS CHURCH, VIRGINIA

SHEET: C-0305

File No. CB-9 Tax Map No. 40-3 Job No. 13-016 Cadd Dwg. File: Q:\sdskproj\13016\dwg\Engineering\Plans\SESP\13016C-0302.dwg Xref: SESP/13016B-0002

NOTES

1. THE PROPERTIES SHOWN HERON ARE DESIGNATED BY THE CITY OF FALLS CHURCH, VIRGINIA, AS HAVING REAL PROPERTY CODE (RPC) NUMBERS 51-221-006, 51-221-007, AND ARE ZONED B-2.

2. THE PROPERTIES ARE NOW AS FOLLOWS:
   A) RPC 51-221-006: IN THE NAME OF THE SCHOOL BOARD OF THE CITY OF FALLS CHURCH.
   B) RPC 51-221-007: IN THE NAME OF THE CITY OF FALLS CHURCH.

3. THIS PLAN AND THE SURVEY UPON WHICH IT IS BASED SHOWS ONLY THOSE IMPROVEMENTS THAT ARE OBSERVABLE AND CAN BE LOCATED USING NORMAL SURVEY METHODS. OBSERVED EVIDENCE OF UTILITIES HAS BEEN SHOWN PURSUANT TO SECTION 5 PARAGRAPH E (IV) OF THE ALTA/NSPS MINIMUM STANDARD DETAIL REQUIREMENTS. THERE ARE NO GUARANTEES, EITHER EXPRESS OR IMPLIED, THAT THE UNDERGROUND UTILITIES SHOWN COMPRISE ALL SUCH UTILITIES IN THE AREA, EITHER IN SERVICE OR ABANDONED, OR THAT THE UNDERGROUND UTILITIES SHOWN ARE IN THE EXACT LOCATION INDICATED. THE UNDERGROUND UTILITIES HAVE NOT BEEN PHYSICALLY LOCATED.

4. NO OBSERVED EVIDENCE WAS FOUND OF: RECENT EARTH MOVING WORK, BUILDING CONSTRUCTION, OR BUILDING ADDITIONS; PROPOSED CHANGES IN STREET RIGHT OF WAY LINES IF SUCH INFORMATION IS MADE AVAILABLE TO THE SURVEYOR BY THE CONTROLLING JURISDICTION; RECENT STREET OR SIDEWALK CONSTRUCTION OR REPAIRS OBSERVED IN THE PROCESS OF CONDUCTING THE FIELDWORK.

5. TOTAL AREA OF THE PROPERTIES REFERENCED IS 1,075,264 SQUARE FEET OR 24.6847 ACRES.

6. THIS PLAN IS BASED ON A CURRENT FIELD SURVEY BY THIS FIRM AND AN AIRBORNE SURVEY PERFORMED BY MCKENZIE SNYDER, INC. THE AIRBORNE IMAGERY WAS OBTAINED ON FEBRUARY 13, 2018 AND THIS PLAN, MAP, OR DIGITAL GEOSPATIAL DATA INCLUDING METADATA MEETS MINIMUM ACCURACY STANDARDS UNLESS OTHERWISE NOTED.

7. THE FEDERAL EMERGENCY MANAGEMENT AGENCY'S FLOOD INSURANCE RATE MAP FOR FAIRFAX COUNTY, VIRGINIA, MAP NUMBER 51059C0165E, EFFECTIVE DATE SEPTEMBER 17, 2010, DESIGNATES THE PROPERTY AS BEING IN ZONE X, AREAS DETERMINED TO BE OUTSIDE THE 0.2% ANNUAL CHANCE FLOODPLAIN.

8. EASEMENTS, CONDITIONS, COVENANTS AND RESTRICTIONS, SHOWN AND/OR NOTED, ARE PER THE TITLE REPORT PREPARED BY WALKER TITLE, LLC, CASE NUMBER A18001149, EFFECTIVE DATE FEBRUARY 20, 2018.

10. THE SITE SHOWN HEREON IS REFERENCED TO THE VIRGINIA COORDINATE SYSTEM OF 1983, [NAD 83(2011) (EPOCH:2010.0000)] AS COMPUTED FROM A FIELD RUN BOUNDARY AND HORIZONTAL CONTROL SURVEY THAT TIES THIS SUBDIVISION BOUNDARY TO NOAA/NGS MONUMENT PID NUMBER DF9217; ZDC1 DC WAAS 1 CORS ARP. THE COMBINED FACTOR APPLIED TO THE FIELD DISTANCES TO DERIVE THE REFERENCED COORDINATES IS 0.99994706. THE FOOT DEFINITION USED FOR CONVERSION OF THE MONUMENT COORDINATES AND IN THE PERFORMANCE OF THIS SURVEY IS THE U.S. SURVEY FOOT.

11. THE PROPERTY IS SUBJECT TO THE AGREEMENT OF SALE BETWEEN THE CITY OF FALLS CHURCH, VIRGINIA AND THE FAIRFAX COUNTY WATER AUTHORITY DATED JANUARY 3, 2014.

SANITARY AS-BUILT DATA

SMH 113	
MANHOLE TOP =	384.42
LAT INV IN (NORTH)=	379.09
LAT INV IN (N.WEST)=	379.22
6"INV OUT (SMH 112)=	378.70
SMH 112	
MANHOLE TOP =	383.00
6"INV IN (SMH 113)=	375.49
6"INV OUT (SOUTH)=	375.44
SMH 109	
MANHOLE TOP =	405.02
LATERAL IN (BLDG)=	
8"INV OUT (SMH 2057)=	
SMH 2057	
MANHOLE TOP =	403.93
8"INV IN (SMH 109)=	393.83
3"INV IN (TOP DROP NW)=	399.95
3"INV IN (BOT DROP NW)=	394.30
8"INV OUT (SMH 108)=	393.66
SMH 108	
MANHOLE TOP =	402.03
8"INV IN (SMH 2057)=	393.29
8"INV OUT (SMH 107)=	393.07
SMH 107	
MANHOLE TOP =	401.98
8"INV IN (SMH 108)=	392.54
8"INV OUT (SMH 106)=	392.52

PIPE SIZES FROM RECORD INFORMATION

STORM AS-BUILT DATA

SD 2089	
GRATE INLET TOP =	391.46
18"RCP OUT (SD 2088)=	389.40
SD 2088	
MANHOLE TOP =	393.83
12"RCP IN (N.WEST)=	388.04
18"RCP IN (SD 2089)=	388.08
18"RCP OUT (SD 2087)=	387.63
SD 2087	
MANHOLE TOP =	385.40
18"RCP IN (SD 2088)=	381.59
12"RCP IN (SD 742)=	380.74
15"RCP OUT (SD 2031)=	380.66
J1394	
GRATE INLET TOP =	379.71
15"RCP OUT (J1393)=	376.66
J1393	
MANHOLE TOP =	379.10
15"RCP IN (J1394)=	376.38
15"RCP IN (SD2087)=	376.83
22"x34"RCP OUT (J1391)=	376.33
J1392	
GRATE INLET TOP =	378.11
18"RCP OUT (J1391)=	374.91
J1391	
MANHOLE TOP =	377.39
18"RCP IN (J1392)=	373.97
22"X34"RCP IN (J1393)=	373.53
24"x38"RCP OUT (J1390)=	373.49
SD 1199	
MANHOLE TOP =	384.86
12"RCP IN (WEST)=	380.29
12"RCP IN (NORTH)=	379.30
12"RCP OUT (SD 1200)=	377.98
SD 1200	
MANHOLE TOP =	380.80
12"RCP IN (SD 1199)=	376.20
24"RCP OUT (J1390)=	375.00

J1390	
MANHOLE TOP =	377.30
24"RCP IN (SD 1200)=	373.87
24x38"RCP IN (J1391)=	373.13
18"RCP IN (S.WEST)=	373.32
24"x38"RCP OUT (J1400)=	373.07
J1403	
MANHOLE TOP =	379.05
15"RCP OUT (J1402)=	
INACCESSIBLE - DEBRIS	
J1402	
MANHOLE TOP =	377.35
15"RCP IN (J1403)=	373.45
15"RCP OUT (J1400)=	373.30
J1400	
MANHOLE TOP =	377.26
15"RCP IN (J1402)=	372.61
21"RCP IN (J1301)=	368.49
24"x38"RCP IN (J1390)=	371.75
27"RCP OUT (J1183)=	368.14
J1181	
GRATE INLET TOP =	387.31
15"RCP OUT (J1038)=	383.59
J1038	
MANHOLE TOP =	381.83
15"RCP IN (J1181)=	378.43
15"RCP OUT (J1183)=	378.38
J1183	
MANHOLE TOP =	381.58
15"RCP IN (J1038)=	376.67
27"RCP IN (J1400)=	365.88
27"RCP OUT (J1184)=	365.51

SD 2059	
GRTAE INLET TOP =	394.09
8"RCP OUT (AA030)=	390.44
SD 1019	
MANHOLE TOP =	395.74
12"RCP OUT (AA030)=	392.64
12"RCP IN ()=	392.74
AA030	
MANHOLE TOP =	395.32
12"RCP IN (SD 1019)=	391.90
8"RCP IN (SD 2059)=	390.00
18"RCP OUT (AA029)=	389.11
AA029	
MANHOLE TOP =	393.74
12"RCP IN (N.EAST)=	389.02
18"RCP IN (AA030)=	388.17
18"RCP OUT (AA028)=	388.14
AA028	
MANHOLE TOP =	390.32
18"RCP IN (AA029)=	386.56
18"RCP OUT (AA027)=	386.45
AA027	
MANHOLE TOP =	390.43
18"RCP IN (AA028)=	385.71
21"RCP OUT (AA026)=	385.42

WALTER L. PHILLIPS INCORPORATED
ESTABLISHED 1945
Engineers • Surveyors • Planners
Landscape Architects • Arborists
207 PARK AVENUE
FALLS CHURCH, VIRGINIA 22046
(703) 532-6163 Fax (703) 533-1301
www.WLPINC.com

DRAWN: AI/ KW/ TT
CHECKED: KW

DATE: SESP PRE-SUB01 5/15/2020, SESP SUB01 06/08/2020
SCALE: NONE

COMMONWEALTH OF VIRGINIA
KAREN L. S. WHITE
Lic. No.041850
6/08/2020
PROFESSIONAL ENGINEER

NO.	DESCRIPTION	DATE	REV.: BY	APPROVED	DATE

REVISION APPROVED BY

NOTE: THE VERTICAL DATUM REFERENCED ON THIS PLAN IS THE NORTH AMERICAN DATUM OF 1988 (NAVD88)

EXISTING CONDITIONS NOTES

WEST FALLS CHURCH ECONOMIC DEVELOPMENT

SPECIAL EXCEPTION SITE PLAN

CITY OF FALLS CHURCH, VIRGINIA

SHEET: C-0306

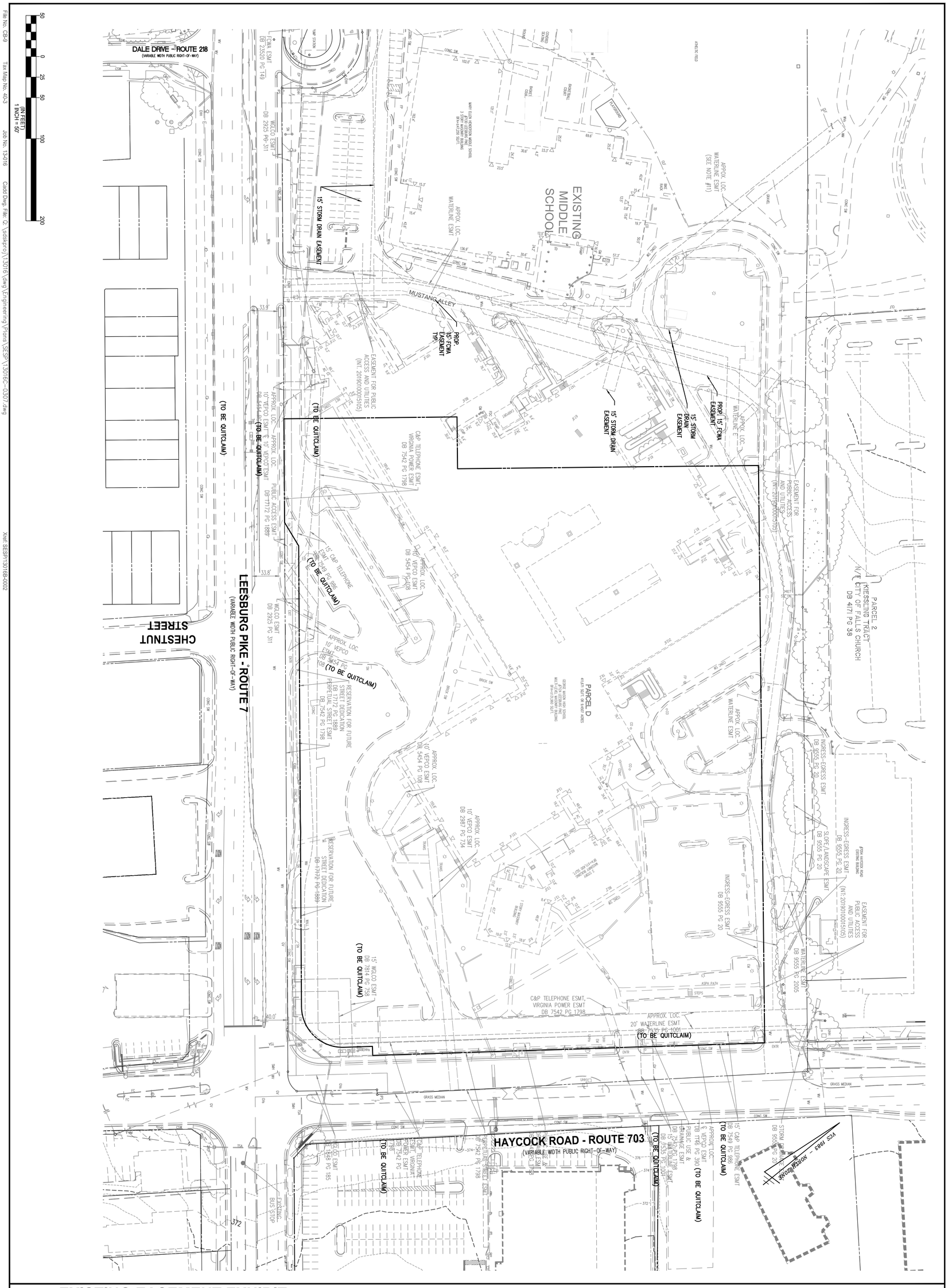

EXISTING EASEMENT EXHIBIT

WEST FALLS CHURCH ECONOMIC DEVELOPMENT

SPECIAL EXCEPTION SITE PLAN

CITY OF FALLS CHURCH, VIRGINIA

REVISION APPROVED BY					
NO.	DESCRIPTION	DATE	REV. BY	APPROVED	DATE

NOTE: THE VERTICAL DATUM REFERENCED ON THIS PLAN IS THE NORTH AMERICAN DATUM OF 1988 (NAVD88)

COMMONWEALTH OF VIRGINIA
KAREN L. S. WHITE
Lic. No.041850
6/08/2020
PROFESSIONAL ENGINEER

WALTER L. PHILLIPS INCORPORATED
ESTABLISHED 1945
Engineers • Surveyors • Planners
Landscape Architects • Arborists
207 PARK AVENUE
FALLS CHURCH, VIRGINIA 22046
(703) 532-6163 Fax (703) 533-1301
www.WLPINC.com

SCALE: 1" = 50' | DATE: SESP PRE-SUB01 5/15/2020, SESP SUB01 06/08/2020 | DRAWN: AI / KW / TT | CHECKED: KW

SHEET: C-0307

File No. CB-9 Tax Map No. 40-3 Job No. 13-016 Cadd Dwg. File: Q:\sdskproj\13016\dwg\Engineering\Plans\SESP\13016C-0307.dwg Xref: SESP13016B-0002

WALTER L. PHILLIPS INCORPORATED
ESTABLISHED 1945
Engineers • Surveyors • Planners
Landscape Architects • Arborists
207 PARK AVENUE
FALLS CHURCH, VIRGINIA 22046
(703) 532-6163 Fax (703) 533-1301
www.WLPINC.com

DRAWN: AI / KW / TT
CHECKED: KW
SCALE: 1" = 50'
DATE: SESP PRE-SUB01 5/15/2020, SESP SUB01 06/08/2020

COMMONWEALTH OF VIRGINIA
KAREN L. S. WHITE
Lic. No.041850
6/08/2020
PROFESSIONAL ENGINEER

NO.	DESCRIPTION	DATE	REV. BY	APPROVED	DATE

REVISION APPROVED BY

NOTE: THE VERTICAL DATUM REFERENCED ON THIS PLAN IS THE NORTH AMERICAN DATUM OF 1988 (NAVD88)

PROPOSED EASEMENT EXHIBIT

WEST FALLS CHURCH ECONOMIC DEVELOPMENT

SPECIAL EXCEPTION SITE PLAN

CITY OF FALLS CHURCH, VIRGINIA

DEMOLITION LEGEND

- EXISTING BUILDING TO BE DEMOLISHED
- CONCRETE, ASPHALT, CURB & GUTTER TO BE DEMOLISHED
- UTILITY TO BE DEMOLISHED OR ABANDONED AS NOTED
- PROPOSED LIMITS OF CLEARING & GRADING

DEMOLITION NOTES

1. ALL TREES WITHIN LIMITS OF CLEARING AND GRADING TO BE REMOVED.

50 0 25 50 100 200
(IN FEET)
1 INCH = 50'

Engineers • Surveyors • Planners
Landscape Architects • Arborists
207 PARK AVENUE
FALLS CHURCH, VIRGINIA 22046
(703) 532-6163 Fax (703) 533-1301
www.WLPINC.com

WALTER L. PHILLIPS INCORPORATED
ESTABLISHED 1945

COMMONWEALTH OF VIRGINIA
KAREN L. S. WHITE
Lic. No.041850
6/08/2020
PROFESSIONAL ENGINEER

DRAWN: AI / KW / TT
CHECKED: KW
SCALE: 1" = 50'
DATE: SESP PRE-SUBD1 5/15/2020, SESP SUBD1 06/08/2020

REVISION APPROVED BY			
NO.	DESCRIPTION	DATE	REV. BY	APPROVED	DATE

NOTE: THE VERTICAL DATUM REFERENCED ON THIS PLAN IS THE NORTH AMERICAN DATUM OF 1988 (NAVD88)

DEMOLITION PLAN

WEST FALLS CHURCH ECONOMIC DEVELOPMENT

SPECIAL EXCEPTION SITE PLAN

CITY OF FALLS CHURCH, VIRGINIA