PUBLIC WORKS NOTES:

1. All requirements relative to City Code and Public Works Design and Construction Standards shall be submitted and approved before release of site plans.
2. All required bonds, escrows, insurances, cash, etc., shall be submitted and approved before release of site plans.
3. Plan and profile shall be submitted (inked on mylar size 24" x 36") for all storm sewers and street projects in public right-of-ways or public easements and approved before release of site plans.
4. Contractor is responsible to notify all utility companies before construction begins.
5. All datum shall be based on USC and GS datum.
6. Bonds shall not be released until the receipt and approval by the City of as-built site plan, plans and profiles, etc.
7. All underground utilities and transformers shall be shown on site plan and confirmed per location on as-built plan.
8. The owner shall notify the Director of Public Works in Writing three days prior to the beginning of all street or storm sewer work shown on the site plan.
9. The installation of improvements as required in this article shall in no case serve to bind the city to accept such improvements for the maintenance, repair of operation thereof, but such acceptance, shall be subject to the existing regulations concerning the acceptance of each type of improvement.
10. No lane closures are permitted on West Broad Street before 9:30 AM and after 3:00 PM. Only one lane may be closed at a time. VDOT requirements for traffic control will govern.
11. Normal construction hours are 7:00 AM to 9:00 PM Monday, through Friday and 9:00 AM to 9:00 PM on weekends and holidays.
12. Permits are required for construction work located within the established City right-of-way.

SITE PLAN SHEET INDEX

C-0101 COVER SHEET
C-0201 NOTES AND ZONING TABULATIONS
C-0202 ARCHITECTURAL PROJECT DATA
C-0203 VOLUNTARY CONCESSIONS
C-0204 VOLUNTARY CONCESSIONS
C-0205 VOLUNTARY CONCESSIONS
C-0206 VOLUNTARY CONCESSIONS
C-0207 VOLUNTARY CONCESSIONS
C-0208 VOLUNTARY CONCESSIONS
C-0209 APPROVED SPECIAL EXCEPTION CONCEPTUAL DEVELOPMENT PLAN
C-0210 APPROVED SPECIAL EXCEPTION CONCEPTUAL DEVELOPMENT PLAN
C-0211 DETAILS
C-0212 DETAILS
C-0213 DETAILS
C-0214 DETAILS
C-0301 EXISTING CONDITIONS PLAN
C-0302 EXISTING CONDITIONS NOTES
C-0303 DEMOLITION PLAN
C-0304 PRELIMINARY SUBDIVISION & CONSOLIDATION PLAT
C-0305 PRELIMINARY SUBDIVISION & CONSOLIDATION PLAT NOTES
C-0401 LAYOUT PLAN
C-0402 GEOMETRIC PLAN
C-0403 WEST BROAD STREETSCAPE PLAN
C-0404 NORTH WEST STREET ENLARGMENT PLAN
C-0405 GROVE AVENUE ENLARGEMENT PLAN
C-0406 STRIPING PLAN
C-0407 SIGNAGE PLAN
C-0408 AERIAL VIEW BUILDING SCHEMATIC
C-0409 LOADING AREA 1 - TRUCK MOVEMENTS
C-0410 LOADING AREA 2 - TRUCK & GARABAGE TRUCK MOVEMENTS
C-0411 PUBLIC STREET TRUCK MOVEMENTS
C-0501 GRADING PLAN
C-0502 GRADING ENLARGEMENT
C-0503 GRADING ENLARGEMENT
C-0504 GRADING ENLARGMENT
C-0505 LIMITS OF STREET PAVING
C-0601 EROSION & SEDIMENT CONTROL PLAN - PHASE 1
C-0602 EROSION & SEDIMENT CONTROL PLAN - PHASE 2
C-0603 EROSION & SEDIMENT CONTROL PLAN - PHASE 3
C-0604 EROSION & SEDIMENT CONTROL NARRATIVE
C-0605 EROSION & SEDIMENT CONTROL DETAILS
C-0701 EXISTING DRAINAGE DIVIDES
C-0702 PROPOSED DRAINAGE DIVIDES
C-0703 STORMWATER MANAGEMENT AND ONSITE BMP CALCULATIONS
C-0704 STORMWATER HYDROGRAPHS
C-0705 STORMWATER MANAGEMENT DETAILS
C-0706 BMP SCHEMATIC
C-0707 BIORETENTION PLANTER PLAN AND DETAILS
C-0708 BMP MANUFACTURED DEVICE DETAILS
C-0801 STORM SEWER PROFILES
C-0802 STORM SEWER PROFILE & DETAILS
C-0901 UTILITY PROFILES
C-0902 UTILITY PROFILES
C-0903 SANITARY CAPACITY STUDY
C-1201 TREE SURVEY
C-1202 TREE PRESERVATION NOTES AND DETAILS
C-1203 TREE INVENTORY
C-1204 TREE INVENTORY
C-1401 PRELIMINARY DRY UTILITY PLAN
C-1402 PRELIMINARY DRY UTILITY PLAN
E1 PHOTOMETRIC PLAN
L1.0 MATERIALS & PAVING PLAN
L2.0 STREETSCAPE DETAILS
L2.1 STREETSCAPE DETAILS
L2.2 STREETSCAPE DETAILS
L2.5 PROJECT HARDSCAPE DETAILS
L2.6 STREETSCAPE SECTIONS
L3.0 LANDSCAPE PLAN - STREETSCAPE
L3.1 LANDSCAPE NOTES & DETAILS
L3.2 LANDSCAPE DETAILS
L4.0 LIMITS OF IRRIGATION PLAN - STREETSCAPE
A1.01 GROUND FLOOR LEVEL
A1.02 LEVEL 1A
A1.03 SECOND FLOOR LEVEL
A1.04 THIRD FLOOR LEVEL
A1.05 4TH AND 5TH FLOOR LEVELS
A1.06 6TH FLOOR LEVEL
A1.07 PARKING LEVEL 0
A1.08 PARKING LEVEL - 1
A1.09 PARKING LEVEL - 2
A2.00 SOUTH AND EAST ELEVATIONS
A2.01 NORTH, NW AND WEST ELEVATIONS
A2.02 MARKET SQ NORTH & SOUTH ELEVATIONS
A2.03 MASON AVE. EAST & WEST ELEVATIONS
A3.01 CONCEPTUAL SKETCH/ELEVATION
A4.01 PARKING ALLOCATION
A4.02 PARKING ALLOCATION
A4.03 BICYCLE ALLOCATION
A5.01 SHADOW STUDY - SUMMER SOLSTICE
A5.02 SHADOW STUDY - SPRING & FALL SOLSTICE
A5.03 SHADOW STUDY - WINTER SOLSTICE

PUBLIC UTILITIES NOTES:

FAIRFAX WATER - WATER MAIN CONSTRUCTION NOTES

1. ALL WATER MAIN CONSTRUCTION, TESTING AND SAMPLING SHALL COMPLY WITH THE REQUIREMENTS AND SPECIFICATIONS OF FAIRFAX WATER'S CONSTRUCTION PRACTICE MANUAL AND THE REQUIREMENTS OF THE FAIRFAX COUNTY PUBLIC FACILITIES MANUAL. ALL WATER MAIN, FITTINGS AND APPURTENANCES SHALL COMPLY WITH FAIRFAX WATER'S "APPROVED PRODUCTS LIST". THE CONSTRUCTION PRACTICE MANUAL AND APPROVED PRODUCTS LIST MAY BE FOUND ON THE FW WEBSITE AT WWW.FAIRFAXWATER.ORG.

2. THE DEVELOPER SHALL REQUEST INSPECTION BY FAIRFAX WATER THREE DAYS PRIOR TO COMMENCING CONSTRUCTION OF THE WATER MAIN (PHONE NUMBER 703-289-6388 OR 6389).

3. NO WATER MAIN CONSTRUCTION IS PERMITTED, OR VALVES OPERATED WITHOUT PRIOR NOTIFICATION OF FAIRFAX WATER (PHONE NUMBER 703-289-6388 OR 6389).

4. MAXIMUM WORKING PRESSURE SHALL BE 60 PSI.

5. THE DEVELOPER WILL BE RESPONSIBLE FOR ANY RELOCATION OR REMOVAL OF WATER MAINS AND APPURTENANCES DUE TO THE DEVELOPMENT OF THIS PROPERTY. SERVICE LINES WHICH WILL NO LONGER BE USED SHALL BE REMOVED AND DISCONNECTED AT THE WATER MAIN BY THE DEVELOPER, AND THE CORPORATION STOP SHUT-OFF AND CAPPED, OR REMOVED AND PLUGGED (WITH A TAPERED PLUG) AS DIRECTED BY THE FAIRFAX WATER INSPECTOR. THE DEVELOPER MAY ALSO BE REQUIRED TO USE ADDITIONAL PIPE RESTRAINT OR ALTERNATIVE CONSTRUCTION METHODS NOT SHOWN ON THE PLANS IF FIELD CONDITIONS WARRANT, AS DETERMINED BY THE FAIRFAX WATER INSPECTOR.

6. ALL NEW AND EXISTING VALVE BOXES MUST BE FULLY ADJUSTED TO CONFORM TO THE FINAL ASPHALT GRADE. NO PAVING ADJUSTERS WILL BE PERMITTED.

7. ALL NEW HYDRANTS SHALL BE INSTALLED WITH FACTORY SHOP COATINGS TO MATCH THE FOLLOWING:

   - HYDRANT BARREL: KENNEDY SAFETY RED OR MUELLER RED #10 & TOPS AND CAPS: KENNEDY SILVER OR MUELLER SILVER #18 OR
   - HYDRANT BARREL AND CAPS: KENNEDY SILVER OR MUELLER SILVER #18 & TOPS: KENNEDY SAFETY RED OR MUELLER RED #10

8. ALL NEW D.I.P. WATER MAIN SHALL BE WRAPPED WITH POLYETHYLENE ENCASEMENT. THERE SHALL BE A 6-INCH ENVELOPE OF 21A SELECT FILL FOR ALL POLYETHYLENE WRAPPED WATER MAIN. SEE THE TRENCH DETAILS ON THE CURRENT VERSION OF FW STANDARD DETAILS. THESE DETAILS MAY BE FOUND ON THE FW WEBSITE AT WWW.FAIRFAXWATER.ORG.

9. WHEN CONNECTING TO AN EXISTING WATER MAIN, CONTRACTOR MUST EXCAVATE AND EXPOSE NEAREST VALVE IN THE PRESENCE OF A FAIRFAX WATER INSPECTOR IN ORDER TO DETERMINE THE CONDITION OF ITS RESTRAINT. IF FW INSPECTOR DEEMS IT NECESSARY, CONTRACTOR MUST RESTRAIN THE VALVE OR REPLACE THE RESTRAINT SYSTEM.

10. DURING WET TAP INSTALLATIONS THE CONTRACTOR SHALL SAVE AND TAG THE COUPON CLEARLY SHOWING THE DATE, LOCATION, DIAMETER AND PIPE MATERIAL. THE TAGGED COUPON SHALL BE GIVEN TO FAIRFAX WATER'S INSPECTOR FOR FURTHER PROCESSING. IF ANY PIPE IS TO BE ABANDONED, PRIOR TO CAPPING THE MAIN, A SMALL SECTION OF PIPE SHALL BE REMOVED, TAGGED AS DESCRIBED ABOVE AND GIVEN TO THE FAIRFAX WATER INSPECTOR.

11. THE PROPERTY DESCRIBED ON THIS PLAN IS LOCATED IN AN AREA WHERE THE WATER PRESSURE WILL EXCEED 80 P.S.I. IN ACCORDANCE WITH FAIRFAX WATER RULES AND REGULATIONS AND THE FAIRFAX COUNTY PLUMBING CODE, A PRESSURE REGULATION VALVE MUST BE INSTALLED BY THE PROPERTY OWNER IN THE BUILDING PLUMBING SYSTEM IN ORDER TO ELIMINATE WATER HAMMER AND UNNECESSARY WASTAGE OF WATER. PROVISIONS FOR THERMAL EXPANSION PROTECTION SHALL BE REQUIRED.

12. FIRE LINES SHALL BE PRIVATELY OWNED AND MAINTAINED BY THE PROPERTY OWNER. FAIRFAX WATER'S OWNERSHIP AND MAINTENANCE RESPONSIBILITY INCLUDES AND STOPS AT THE BRANCH VALVE AT FAIRFAX WATER'S MAIN IN THE RIGHT-OF-WAY OR EASEMENT.

13. IN ORDER TO MAINTAIN ADEQUATE DOMESTIC PRESSURE, BOOSTER PUMPS ARE REQUIRED TO SERVE ELEVATIONS ABOVE 360 FEET M.S.L.

14. USE Q20 = 3000 GPM
    PROPOSED FIRE HYDRANT "3"
    S = 49 PSI
    R = 45 PSI @ 1,000 GPM
    Q20 = 3,000 GPM
    HYDRANT ELEV. = 337'
    LOW HGL = 445'
    CALCULATION DATE = 11/30/2016

PLANNING NOTES:

SPECIAL EXCEPTION:

SPECIAL EXCEPTION FOR:
1. BUILDING HEIGHT BONUS - MAX. 85'
2. RESIDENTIAL USE WITHIN MIXED-USE DEVELOPMENT IN B-1 DISTRICT.

APPROVED ON JANUARY 11, 2016 (RESOLUTION 2016-04)

3. A SPECIAL EXCEPTION AMENDMENT WAS SUBMITTED TO REMOVE THE HOTEL USE AND REPLACE IT WITH 72 AGE RESTRICTED APARTMENTS. THIS AMENDMENT IS CURRENTLY UNDER REVIEW.

ARBORIST NOTES:

RPI MAP INFORMATION:

RPC #'s:
51-202-015, 51-202-014, 51-202-013, 51-202-012, 51-202-011, 51-202-010, 51-202-009, 51-202-028, 51-202-005, 51-202-004, 51-202-003

MISCELLANEOUS NOTES:

1. Upon satisfactory completion of the installation of required improvements, as shown on the approved site plan or a section thereof, the developer shall submit to the Department of Planning five copies of an as-built site plan certified by the engineer, architect and/or surveyor for approval for conformity with the approved site plan.
2. The As-Built Site Plan shall be submitted and approved prior to the issuance of the final Occupancy Permit.
3. Final approval by the Planning Commission of this site plan shall expire one year after the day of such approval if building permits have not been obtained for construction in accordance therewith, unless an extension is granted by the City.
4. In any development involving a condominium, cooperative, automatic owners' association or other form of ownership in which there is common area within the development, the documents pertaining to this form of ownership shall be approved by the City Attorney prior to issuance of any Occupancy Permit.
5. Any proposed changes or revisions during the execution of or subsequent to implementation of the approved site plan shall be subject to City review and approval.
6. The federal emergency management agency's flood insurance rate map for the City of Falls Church, Virginia, map number 5100540001c, revised date July 16, 2004, designates the property as being in zone x, "Areas determined to be outside the 0.2% annual chance floodplain."

WAIVERS:

1. A WAIVER OF THE 100' DISTANCE FROM A COMMERCIAL ENTRANCE OR EXIT TO AN "R" DISTRICT [SECT. 48-938 (d)]

   • PROPOSED SITE ENTRANCE OFF OF PARK AVENUE WITH A DISTANCE OF 50' TO RESIDENTIAL DISTRICT ACROSS PARK AVENUE.

2. A WAIVER REQUESTED TO REDUCE THE BUFFER DENSITY TO THAT SHOWN ON THE PLAN. [SECT. 48-1183]

   • ALONG THE EASTERN PROPERTY LINE ADJACENT TO RPC #51-202-016 DUE TO THE EXISTING PUBLIC STORM SEWER AND A PROPOSED CITY STORM SEWER EASEMENT. SEE DETAIL SHEET L3.0.

MISCELLANEOUS NOTES:

Easement(s):

1. PUBLIC SIDEWALK & UTILITIES EASEMENT ALONG WEST BROAD STREET, NORTH WEST STREET & PARK AVENUE AS SHOWN ON THE PRELIMINARY SUBDIVISION PLAT.
2. PUBLIC STORM SEWER EASEMENT FOR THE EXISTING STORM PIPE ON THE EASTERN EDGE OF THE SITE.

Subdvision(s) and Consolidation(s):

CONSOLIDATION OF THE (11) PARCELS INCLUDED IN THIS DEVELOPMENT.

Dedication(s):

1. 0.1' (25 SF) DEDICATION FOR THE EAST-WEST PORTION OF NORTH WEST STREET TO CREATE A 25.0' DISTANCE FROM CENTERLINE TO PROPERTY LINE.
2. 1,415 SF. DEDICATION ON WEST BROAD STREET TO ALIGN THE PROPERTY AT THE EASTERN EDGE OF THE SITE.

Site Plan Approval:

–

APPROVALS

PLANNING COMMISSION FINAL APPROVAL:

VARIANCE (Date(s) of Approval by BZA):

1. APPLICATION A1561-14 – JULY 17, 2014 VARIANCE APPROVED TO APPEAL A DETERMINATION FROM THE ZONING ADMINISTRATOR THAT A NEW PERMIT FROM THE H.A.R.B. IS REQUIRED TO DEMOLISH THE HISTORIC STRUCTURE. SEE SHEET C-0302 FOR THE RESOLUTION.

2. APPLICATION V1585-16 – OCTOBER 13, 2016 VARIANCE APPROVED, WITH CONDITIONS AND RESTRICTIONS, TO ALLOW A SIDE YARD SETBACK OF 10' INSTEAD OF 20' ON THE PORTION OF THE SITE IDENTIFIED AS 919 PARK AVENUE. SEE SHEET C-0302 FOR THE RESOLUTION.

BOND(S) POSTED (Date(s) and Amount(s)):

FINAL STAFF APPROVAL:

Planning _____ Signature : | Date :
Public Works _____

SUBSEQUENT ACTIONS:

BUILDING PERMIT ISSUED (Date) : _____
AS-BUILT APPROVED (Date) : _____
COMMON AREA DOCUMENTS APPROVED (Date) : _____
LANDSCAPE ESCROW ACCEPTED (Date) : _____
CERTIFICATE OF OCCUPANCY (Date) : _____
OTHER :

Revisions Approved prior to Certificate of Occupancy:

Description	Date Approved

FOUNDERS ROW
NAME OF PROJECT

INTERSECTIONS OF WEST BROAD STREET, NORTH WEST STREET, AND PARK AVENUE
ADDRESS

MILLCREEK RESIDENTIAL C/O JOE MUFFLER — 301-255-6047
CONTRACT PURCHASER — TELEPHONE #

6701 DEMOCRACY BOULEVARD SUITE 500 BETHESDA, MD 20817 — 240-292-6895
ADDRESS — FAX. #

CURRENT PROPERTY OWNERS:
SEE LIST OF PROPERTY OWNERS ON SHEET C-0305.

FIRE MARSHAL NOTES:

All requirements relative to City Fire Code and Virginia Building Code must be complied with.

USE GROUP CLASSIFICATION:

UNDERGROUND LEVELS: S2
GROUND LEVEL: R-2, M, A-1, A-2, S-2
LEVEL 1A: R-2, B, S-2
LEVEL 2: R-2, A-1, A-3
LEVEL 3 & HIGHER: R-2

TYPE OF CONSTRUCTION:

PARKING LEVELS (ALL): TYPE IA
GROUND LEVEL & MOVIE THEATER: TYPE IA
RESIDENTIAL LEVELS BELOW PODIUM: TYPE IA
RESIDENTIAL LEVELS ABOVE PODIUM: TYPE IIIA

FLOW AT FIRE HYDRANT: 2700 GPM

APPLICATION FOR REVIEW AND APPROVAL BY

CITY OF FALLS CHURCH, VIRGINIA

Certification

COMMONWEALTH OF VIRGINIA
KAREN L. S. WHITE
Lic. No.041850
8/14/18
PROFESSIONAL ENGINEER

Signature

WALTER L. PHILLIPS INCORPORATED
ESTABLISHED 1945
Engineers • Surveyors • Planners
Landscape Architects • Arborists
207 PARK AVENUE
FALLS CHURCH, VIRGINIA 22046
(703) 532-6163 Fax (703) 533-1301
www.WLPINC.com

Site Plan **MUNIS # 2013 1165** **C-0101**

CONSTRUCTION NOTES

CONTRACTOR AND DEVELOPER ARE ADVISED THAT ANY ELECTRONIC FILES ASSOCIATED WITH THE PREPARATION OF THESE PLANS WILL NOT BE RELEASED TO OTHERS FOR USE IN CONSTRUCTION STAKEOUT OR RELATED SERVICES.

1. THE EXISTING UNDERGROUND UTILITIES SHOWN HEREON ARE BASED UPON AVAILABLE INFORMATION. THE CONTRACTOR SHALL BE RESPONSIBLE FOR DETERMINING THE EXACT LOCATION OF ALL UTILITIES BEFORE COMMENCING WORK AND FOR ANY DAMAGES WHICH MAY OCCUR BY HIS FAILURE TO LOCATE OR PRESERVE THESE UNDERGROUND UTILITIES. IF DURING CONSTRUCTION OPERATIONS THE CONTRACTOR SHOULD ENCOUNTER UTILITIES OTHER THAN IN THOSE SHOWN ON THE PLANS, HE SHALL IMMEDIATELY NOTIFY THE ENGINEER AND TAKE NECESSARY AND PROPER STEPS TO PROTECT THE FACILITY AND ASSURE THE CONTINUANCE OF SERVICE.

2. THE CONTRACTOR SHALL DIG TEST PITS AS REQUIRED FOLLOWING NOTIFICATION AND MARKING OF ALL EXISTING UTILITIES BY MISS UTILITY TO VERIFY THE LOCATION AND DEPTH OF EXISTING UTILITIES. TEST HOLES TO BE PERFORMED AT LEAST 30 DAYS PRIOR TO START OF CONSTRUCTION. ANY DISCREPANCIES ARE TO BE REPORTED IMMEDIATELY TO THE OWNER AND ENGINEER. REDESIGN AND APPROVAL BY REVIEWING AGENCIES SHALL BE OBTAINED IF THIS INSTANCE OCCURS.

3. THE CONTRACTOR SHALL BE RESPONSIBLE FOR NOTIFYING THE OWNER AND THE ENGINEER OF ANY CHANGES OR CONDITIONS ATTACHED TO PERMITS OBTAINED FROM ANY AUTHORITY ISSUING PERMITS.

4. THE CONTRACTOR SHALL VISIT THE SITE AND SHALL VERIFY EXISTING CONDITIONS PRIOR TO STARTING CONSTRUCTION.

5. THE CONTRACTOR SHALL CLEAR THE SITE OF ALL TREES, BUILDINGS, FOUNDATIONS, ETC. WITHIN THE LIMITS OF CONSTRUCTION UNLESS OTHERWISE SPECIFIED, AND SHALL BE RESPONSIBLE FOR CAUSING EXISTING UTILITIES TO BE DISCONNECTED.

6. THE DEVELOPER SHALL PROVIDE OVER-LOT GRADING TO PROVIDE POSITIVE DRAINAGE AND PRECLUDE PONDING OF WATER.

7. FINISHED GRADES SHOWN FOR FINISHED TOP OF CURB GRADES ON EXISTING ROADS SHALL BE FIELD ADJUSTED AS REQUIRED TO CONFORM TO THE INTENT OF THE TYPICAL SECTION USING THE EXISTING EDGE OF PAVEMENT AS THE CONTROL POINT. A SMOOTH GRADE SHALL BE MAINTAINED FROM THE CENTERLINE OF THE EXISTING RIGHT-OF-WAY TO THE FACE OF CURB TO PRECLUDE THE FORMING OF FALSE GUTTERS AND/OR THE PONDING OF WATER ON THE ROADWAY. THE EXISTING PAVEMENT SHALL BE RECAPPED AND/OR REMOVED AND REPLACED AS REQUIRED TO ACCOMPLISH THIS REQUIREMENT. CURB FORMS SHALL BE INSPECTED AND APPROVED FOR HORIZONTAL AND VERTICAL ALIGNMENT BY CITY OF FALLS CHURCH INSPECTORS PRIOR TO PLACING OF CONCRETE. CONTRACTOR SHALL REFER TO THE ARCHITECTURAL AND STRUCTURAL DRAWINGS FOR FINISHED GRADES ON TOP OF STRUCTURED PARKING DECK.

8. ALL AREAS, ON OR OFF-SITE, WHICH ARE DISTURBED BY THIS CONSTRUCTION AND WHICH ARE NOT PAVED OR BUILT UPON, SHALL BE ADEQUATELY STABILIZED TO CONTROL EROSION AND SEDIMENTATION. THE MINIMUM ACCEPTABLE STABILIZATION SHALL CONSIST OF PERMANENT GRASS, SEED MIXTURE TO BE AS RECOMMENDED BY THE CITY AGENT. ALL SLOPES 3:1 AND GREATER SHALL BE SODDED AND PEGGED OR OTHERWISE STABILIZED IN A MANNER APPROVED BY CITY OF FALLS CHURCH.

9. EXISTING WELLS SHALL BE PERMANENTLY ABANDONED IN ACCORDANCE WITH VIRGINIA STATE WATER CONTROL BOARD REQUIREMENTS.

10. ALL OVER HEAD POLE LINES SHALL BE RELOCATED AS REQUIRED BY THE OWNING UTILITY COMPANIES AND AT THE DEVELOPERS EXPENSE. THE CONTRACTOR SHALL BE RESPONSIBLE FOR MAKING ALL ARRANGEMENTS AND COORDINATING ALL WORK REQUIRED FOR THE NECESSARY RELOCATIONS.

11. SUBBASE MATERIAL SHOWN ON THE TYPICAL STREET SECTION SHALL CONFORM TO VDOT SPECIFICATIONS SECTION 209. PAVEMENT THICKNESS AS SHOWN ON THE PLAN ARE BASED ON AN ASSUMED SOIL SUPPORT VALUES (S.S.V.) OF 10 UNLESS OTHERWISE NOTED. A QUALIFIED SOILS TESTING FIRM SHALL BE ENGAGED BY THE CONTRACTOR TO DETERMINE THE ACTUAL S.S.V. IN ACCORDANCE WITH "A DESIGN GUIDE FOR SUBDIVISION PAVEMENTS IN VIRGINIA" BY N.K. VASWANI, OCTOBER 1973, VHRC 73-821 AS AMENDED. SOIL SUPPORT VALUES SHALL BE OBTAINED AT EACH CHANGE IN SUBGRADE SOILS AND AT A MAXIMUM SPACING OF 500 FEET WHERE SUBGRADE SOILS REMAIN CONSTANT. S.S.V. SHALL BE FURNISHED TO THE ENGINEER AND THE ENGINEER SHALL REVISE THE PAVEMENT DESIGN THICKNESS TO SHOW THE ACTUAL DEPTH OF PAVEMENT MATERIAL REQUIRED AND SHALL SUBMIT THE REVISION TO THE CITY OF FALLS CHURCH FOR REVIEW AND APPROVAL. THE CONTRACTOR IS ADVISED NOT TO BRING THE AREA SUBJECT TO THIS REVISION TO FINISHED GRADE UNTIL AFTER THE REVISED PAVEMENT SECTION IS APPROVED.

12. PRIOR TO BEGINNING CONSTRUCTION, CONTRACTOR SHALL VERIFY FROM THE ARCHITECTURAL DRAWINGS ALL DIMENSION, DETAILS, AND TREATMENTS FOR THE PROPOSED BUILDINGS, WALKWAYS, AND OTHER PROPOSED CONSTRUCTION WHERE INDICATED ON THE PLANS. ANY DISCREPANCIES SHALL IMMEDIATELY BE REPORTED TO DESIGN ENGINEER.

13. THE CONTRACTOR IS TO VERIFY INVERT, SIZE AND LOCATION OF BUILDING UTILITY CONNECTIONS WITH THE MECHANICAL PLANS PRIOR TO PLACEMENT OF UNDERGROUND UTILITIES.

14. NO UNDERGROUND SOILS INVESTIGATION HAS BEEN PERFORMED BY WALTER L. PHILLIPS, INC. ALL SOILS INFORMATION PRESENTED AS PART OF THIS SITE PLAN HAS BEEN PREPARED BY OTHERS AND IS INCLUDED AS REQUIRED FOR CITY OF FALLS SITE PLAN APPROVAL.

15. THE CONTRACTOR SHALL REMOVE EXISTING BUILDINGS, FENCES AND OTHER EXISTING PHYSICAL FEATURES AS REQUIRED.

16. ALL PROPOSED SIDEWALK, CG-6, CG-2 OR CG-6R IS TO BE CONSTRUCTED WITH A MINIMUM 4" AGGREGATE BASE.

17. EXISTING CONSTRUCTION SHALL BE REMOVED TO NEAREST JOINT. NEW CONSTRUCTION SHALL BE PROVIDED AS SHOWN AND ANY DAMAGED AREA SHALL BE REPAIRED TO MATCH CONDITIONS EXISTING PRIOR TO CONSTRUCTION.

18. DAMAGE TO ANY EXISTING ENTRANCES, CURB AND GUTTER, PAVEMENT OR OTHER EXISTING STRUCTURES NOT PROPOSED TO BE DISTURBED WITH THIS DEVELOPMENT, WILL BE THE RESPONSIBILITY OF THE CONTRACTOR AND MUST BE REPAIRED TO THE SATISFACTION OF THE CITY OF FALLS CHURCH, THE VIRGINIA DEPARTMENT OF TRANSPORTATION AND ANY ADJOINING OWNERS THAT MAY BE AFFECTED.

19. THE CONTRACTOR SHALL BE RESPONSIBLE FOR MAKING A SMOOTH TRANSITION TO EXISTING CURB.

20. ALL PRIVATE BUILDING CONNECTIONS ARE TO BE INSTALLED IN ACCORDANCE WITH THE CURRENT PLUMBING CODE.

21. SEE ARCHITECTURAL AND/OR LANDSCAPE DRAWINGS FOR DIMENSIONS AND DETAILS FOR ALL RETAINING WALLS. ALL ON-SITE RETAINING WALLS ARE SUBJECT TO A SEPARATE BUILDING PERMIT TO BE OBTAINED BY OWNER. THIS PLAN IS FOR APPROXIMATE LOCATION AND PROPOSED GRADING ONLY. GEOTECHNICAL AND STRUCTURAL DESIGN TO BE ACCOMPLISHED BY OTHERS. RETAINING WALLS SHOWN ON THIS PLAN ARE FOR THE PURPOSES OF DEMONSTRATING THE PROPOSED TOP AND BOTTOM ELEVATIONS AND LOCATION OF THE WALLS ONLY. RETAINING WALLS ARE TO BE MAINTAINED BY THE PROPERTY OWNERS.

22. TOPS OF EXISTING STRUCTURES WHICH REMAIN IN USE ARE TO BE ADJUSTED IN ACCORDANCE WITH THE GRADING PLAN. ALL PROPOSED STRUCTURE TOP ELEVATIONS ARE TO BE VERIFIED BY THE CONTRACTOR WITH THE SITE GRADING PLANS. IN CASE OF CONFLICT, THE GRADING PLAN SHALL SUPERSEDE PROFILE ELEVATIONS. MINOR ADJUSTMENTS TO MEET FINISHED GRADE ELEVATIONS MAY BE REQUIRED.

23. SEE LANDSCAPE PLAN FOR ALL ON-SITE SIDEWALK, PLANTING AND IRRIGATION DETAILS.

24. THE DESIGN, CONSTRUCTION, FIELD PRACTICES AND METHODS SHALL CONFORM TO THE REQUIREMENTS SET FORTH BY THE CITY OF FALLS CHURCH AND ITS CURRENT ZONING ORDINANCE AND CONSTRUCTION STANDARDS MANUAL. FAILURE TO COMPLY WITH THE CODE, APPLICABLE MANUALS, PROVISIONS OF THE CONSTRUCTION AND ESCROW AGREEMENTS OR THE PERMITS SHALL BE DEEMED A VIOLATION.

25. THE APPROVAL OF THESE PLANS SHALL IN NO WAY RELIEVE THE OWNER/DEVELOPER OR HIS AGENT OF ANY LEGAL RESPONSIBILITIES WHICH MAY BE REQUIRED BY THE CODE OF VIRGINIA OR ANY ORDINANCE ENACTED BY THE GOVERNING AGENCY.

26. A MINIMUM PERMISSIBLE GRADE OF 1.00% IS REQUIRED FOR PAVEMENT TO ASSURE POSITIVE DRAINAGE. IF THERE IS EXISTING PAVEMENT WHICH IS TO REMAIN DISTURBED DURING CONSTRUCTION AND IS LESS THAN 1.00%, THEN THE CONTRACTOR IS TO CHECK TO MAKE SURE THE SITE AREA WILL HAVE ADEQUATE DRAINAGE.

27. IT IS THE CONTRACTOR'S RESPONSIBILITY TO MAKE SURE THAT ANY EXISTING LANDSCAPING WHICH IS TO BE RELOCATED ON THE SITE WILL BE CAREFULLY STORED IN A DESIGNATED AREA BEFORE BEING REPLANTED. COORDINATION WITH THE OWNER FOR MUTUALLY AGREEABLE STORAGE LOCATIONS FOR LANDSCAPE MATERIAL SHALL BE THE RESPONSIBILITY OF THE CONTRACTOR. THE CONTRACTOR SHALL BE RESPONSIBLE FOR THE REPLACEMENT OF PLANT MATERIAL THAT DOES NOT SURVIVE STORAGE AND REPLANTING.

28. CONSTRUCTION STAKEOUT SHALL BE UNDER THE DIRECT SUPERVISION OF A LICENSED LAND SURVEYOR IN THE COMMONWEALTH OF VIRGINIA.

29. NO EVIDENCE OF GRAVES OR BURIAL SITES HAS BEEN FOUND ON THIS PROPERTY.

30. THE CONTRACT PURCHASER HEREBY JOINS IN THE SITE PLAN AND AGREES TO BE BOUND BY ALL PLAN REQUIREMENTS.

SIGNATURE

Joe Muffler 2-15-18

NAME DATE

Vice President

31. A WALL CHECK SURVEY WILL BE REQUIRED WHEN THE BUILDING RISES ABOVE GRADE DURING CONSTRUCTION.

32. CONTRACTOR AND GEOTECHNICAL ENGINEER TO SUBMIT AN ACCEPTABLE PLAN AND METHOD STATEMENT FOR THE SAFE DISPOSAL OF GROUNDWATER FROM THE SITE TO THE CITY.

SURVEY NOTES

1. THE PROPERTIES SHOWN HEREON ARE DESIGNATED BY THE CITY OF FALLS CHURCH, VIRGINIA, AS REAL PROPERTY CODE (RPC) NUMBERS:
   a) 51-202-009, 51-202-010, 51-202-011, 51-202-012, AND 51-202-028, ZONED B-1 "LIMITED BUSINESS"
   b) 51-202-003, 51-202-004, AND 51-202-005, ZONED B-1 "LIMITED BUSINESS"
   c) 51-202-0013, 51-202-014, AND 51-202-015, ZONED B-1 "LIMITED BUSINESS"

2. THE PROPERTIES ARE AS FOLLOWS:
   a) PARCEL 51-202-003, BEING LOT 3, AS RECORDED IN DEED BOOK F-8 AT PAGE 521, IS NOW IN THE NAME OF RAHEJA, LLC, AS RECORDED IN DEED BOOK 3240 AT PAGE 363 AMONG THE LAND RECORDS OF ARLINGTON COUNTY, VIRGINIA.
   b) PARCEL 51-202-004, BEING PART OF LOT 2, AS RECORDED IN DEED BOOK F-8 AT PAGE 521, IS NOW IN THE NAME OF NABILAH PAJELAH, MASSORAH NIAZY, AND ESMATULLAH NIAZY, AS RECORDED IN DEED BOOK 3225 AT PAGE 1656 AMONG THE LAND RECORDS OF ARLINGTON COUNTY, VIRGINIA.
   c) PARCEL 51-202-005, BEING PART OF LOT 1, AS RECORDED IN DEED BOOK F-8 AT PAGE 521, IS NOW IN THE NAME OF ATALLA TRUST, NICK ATALLA, TRUSTEE, AS RECORDED IN DEED BOOK 2420 AT PAGE 847 AMONG THE LAND RECORDS OF ARLINGTON COUNTY, VIRGINIA.
   d) PARCELS 51-202-009, 51-202-010 AND 51-202-011, BEING LOT 1 – 3, MINNIE D. ELLISON SUBDIVISION, AS RECORDED IN DEED BOOK 1257 AT PAGE 78, AMONG THE LAND RECORDS OF FAIRFAX COUNTY, VIRGINIA, IS NOW IN THE NAME OF JOHN E. SHREVE, ET AL, AS SURVIVING TRUSTEES, AS RECORDED IN DEED BOOK 6204 AT PAGE 627, AMONG THE LAND RECORDS OF FAIRFAX COUNTY, VIRGINIA, AND IN DEED BOOK 2741 AT PAGE 2090, AMONG THE LAND RECORDS OF ARLINGTON COUNTY, VIRGINIA.
   e) PARCEL 51-202-012, BEING COMPRISED OF THE METES AND BOUNDS DESCRIPTION, AS RECORDED IN DEED BOOK 4090 AT PAGE 92, IS IN THE NAME OF JOHN E. SHREVE, ET AL, AS SURVIVING TRUSTEES, AS RECORDED IN DEED BOOK 6204 AT PAGE 622, AMONG THE LAND RECORDS OF FAIRFAX COUNTY, VIRGINIA AND IN DEED BOOK 2741 AT PAGE 2090, AMONG THE LAND RECORDS OF ARLINGTON COUNTY, VIRGINIA.
   f) PARCEL 51-202-013, BEING PART OF LOT 1, D.J. BROWN'S PROPERTY, AS RECORDED IN DEED BOOK Y-9 AT PAGE 347, IS NOW IN THE NAME OF JOHN E. SHREVE, ET AL, AS SURVIVING TRUSTEES, AS RECORDED IN DEED BOOK 9504 AT PAGE 269, AMONG THE LAND RECORDS OF FAIRFAX COUNTY, VIRGINIA AND IN DEED BOOK 2741 AT PAGE 2126, AMONG THE LAND RECORDS OF ARLINGTON COUNTY, VIRGINIA.
   g) PARCEL 51-202-014, BEING LOT 4, D.J. BROWN'S PROPERTY, AS RECORDED IN DEED BOOK Y-9 AT PAGE 347, IS NOW IN THE NAME OF TOD W. READ AND JULIA S. READ, AS RECORDED IN DEED BOOK 2561 AT PAGE 369 AMONG THE LAND RECORDS OF ARLINGTON COUNTY, VIRGINIA.
   h) PARCEL 51-202-015, BEING LOT 3, D.J. BROWN'S PROPERTY, AS RECORDED IN DEED BOOK Y-9 AT PAGE 347, IS NOW IN THE NAME OF NIGEL J. YATES AND BERNADETTE REVERIE ADAMS, AS RECORDED IN DEED BOOK 3102 AT PAGE 1093 AMONG THE LAND RECORDS OF ARLINGTON COUNTY, VIRGINIA.
   i) PARCEL 51-202-028, BEING COMPRISED OF PARCELS 1 THROUGH 6, AS RECORDED IN DEED BOOK 1220 AT PAGE 535, AND OUTLOT, MINNIE D. ELLISON SUBDIVISION, AS RECORDED IN DEED BOOK 1257 AT PAGE 78, AMONG THE LAND RECORDS OF FAIRFAX COUNTY, VIRGINIA, IS NOW IN THE NAME OF JOHN E. SHREVE, ET AL, AS SURVIVING TRUSTEES, AS RECORDED IN DEED BOOK 9504 AT PAGE 252, AMONG THE LAND RECORDS OF FAIRFAX COUNTY, VIRGINIA AND IN DEED BOOK 2741 AT PAGE 2107, AMONG THE LAND RECORDS OF ARLINGTON COUNTY, VIRGINIA.

3. THIS PLAN AND THE SURVEY UPON WHICH IT IS BASED SHOWS ONLY THOSE IMPROVEMENTS THAT ARE OBSERVABLE AND CAN BE LOCATED USING NORMAL SURVEY METHODS. THE UNDERGROUND UTILITIES SHOWN HAVE BEEN LOCATED FROM FIELD SURVEY INFORMATION, MISS UTILITY MARKINGS AND EXISTING RECORDS. THERE ARE NO GUARANTEES, EITHER EXPRESS OR IMPLIED, THAT THE UNDERGROUND UTILITIES SHOWN COMPRISE ALL SUCH UTILITIES IN THE AREA, EITHER IN SERVICE OR ABANDONED, OR THAT THE UNDERGROUND UTILITIES SHOWN ARE IN THE EXACT LOCATION INDICATED. THE UNDERGROUND UTILITIES HAVE NOT BEEN PHYSICALLY LOCATED.

4. TOTAL AREA OF THE PROPERTY IS 188,137 SQUARE FEET OR 4.3190 ACRES.

5. THIS PLAN IS BASED ON FIELD SURVEY BY THIS FIRM PERFORMED ON MAY 2, 2013.

6. THE FEDERAL EMERGENCY MANAGEMENT AGENCY'S FLOOD INSURANCE RATE MAP FOR THE CITY OF FALLS CHURCH, VIRGINIA, MAP NUMBER 5100540001C, REVISED DATE JULY 16, 2004, DESIGNATES THE PROPERTY AS BEING IN ZONE X, AREAS DETERMINED TO BE OUTSIDE THE 0.2% ANNUAL CHANCE FLOODPLAIN.

7. EASEMENTS, CONDITIONS, COVENANTS AND RESTRICTIONS, SHOWN AND/OR NOTED, TAKEN FROM THE TITLE COMMITMENT PREPARED BY OLD REPUBLIC NATIONAL TITLE INSURANCE COMPANY, COMMITMENT NUMBERS:
   a. 192001694, 192001695, AND 192001696, EFFECTIVE DATE APRIL 5, 2013, REVISION DATE APRIL 17, 2013
   b. 192001697, 192001698, 192001699, AND 192001700, EFFECTIVE DATE APRIL 8, 2013, REVISION DATE APRIL 22, 2013

8. EASEMENT GRANTED TO VIRGINIA ELECTRIC POWER COMPANY, RECORDED IN DEED BOOK 617 AT PAGE 182 CANNOT BE LOCATED. NO EVIDENCE REMAINS THE UTILITY.

9. THE SITE SHOWN HEREON IS REFERENCED TO THE NATIONAL GEODETIC VERTICAL DATUM OF 1929 AS COMPUTED FROM A FIELD RUN VERTICAL CONTROL SURVEY AND IS REFERENCED TO THE VIRGINIA COORDINATE SYSTEM OF 1983, [NAD 83(2011) (EPOCH:2010.0000)] AS COMPUTED FROM A FIELD RUN BOUNDARY AND HORIZONTAL CONTROL SURVEY THAT TIES THIS SUBDIVISION BOUNDARY AND THE BENCHMARK(S) SHOWN TO NOAA/NGS MONUMENT PID NUMBER DH4144; LWX1 STERLING CORS ARP. THE COMBINED SCALE FACTOR THAT HAS BEEN APPLIED TO THE FIELD DISTANCES TO DERIVE THE REFERENCED COORDINATES IS 0.99994857. THE FOOT DEFINITION USED FOR CONVERSION OF THE MONUMENT COORDINATES AND IN THE PERFORMANCE OF THIS SURVEY IS THE U.S. SURVEY FOOT. CONTOUR INTERVAL IS TWO FEET.

10. THIS SURVEY WAS COMPLETED UNDER THE DIRECT AND RESPONSIBLE CHARGE OF, JAMES A. MADISON, JR., L.S., FROM AN ACTUAL [X] GROUND OR [ ] AIRBORNE SURVEY MADE UNDER MY SUPERVISION; THAT THE IMAGERY AND/OR ORIGINAL DATA WAS OBTAINED ON MAY 2, 2013 AND NOVMEBER 6, 2014; AND THAT THIS PLAN, MAP, OR DIGITAL GEOSPATIAL DATA INCLUDING METADATA MEETS MINIMUM ACCURACY STANDARDS UNLESS OTHERWISE NOTED.

11. THIS SURVEY WAS PERFORMED AT THE REQUEST OF SPECTRUM DEVELOPMENT.

BUILDING HEIGHT

AVERAGE GRADE		
	EX.	PROP.
1	325.03	326.00
2	338.62	337.85
3	341.33	341.40
4	337.76	337.00
5	328.76	329.10
TOTAL	334.30	334.27

LOWEST AVE. GRADE = 334.27'

MAX. HT= 334.27 + 85 = 419.27
PROP. HT= 340.8' + 71.76' = 412.56'
412.56' - 334.27' = 78.29' BLDG. HT.
SPECIAL EXCEPTION GRANTED FOR 85' BLDG HT

*SPECIAL EXCEPTION APPROVED FOR MAXIMUM BUILDING HEIGHT OF 85'

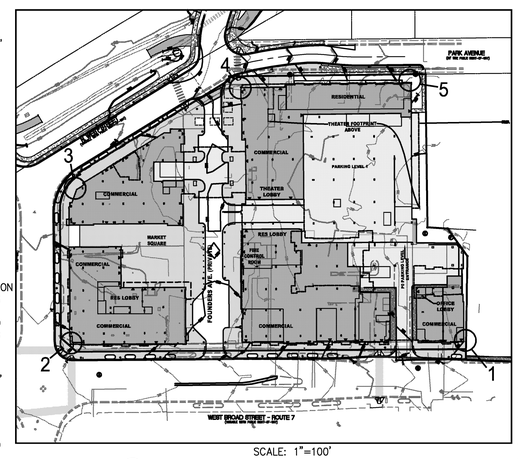

SCALE: 1"=100'

DENOTES CORNER USED FOR AVERAGE GRADE CALCULATION.

LOADING SPACE TABULATION

REQUIRED:
SHOPPING CENTER – 2 SPACE
OFFICE – 1 SPACE
RESIDENTIAL – 1 SPACE
TOTAL 4 SPACES REQUIRED

ZONING TABULATION

EXISTING ZONE: B-1, B-3 & R-1B; REZONED TO B-1 THROUGH ORDINANCE 1944.

EXISTING SITE AREA: 188,137 SF OR 4.32 ACRES
PROPOSED DEDICATION WEST BROAD STREET: 1,415 SF (0.0325 ACRES)
PROPOSED DEDICATION NORTH WEST STREET: 25 SF (0.0006 ACRES)
PROPOSED PARCEL A CONSOLIDATION: 186,697 SF (4.29 ACRES)
PROPOSED SITE AREA: 186,697 SF OR 4.29 ACRES

	REQUIRED BY CODE	ADDT'L REQ'D BY VCS	PROVIDED
MAX. BUILDING HT.	55 FT.		78.88'*
MIN. YARD REQUIREMENTS:			
FRONT (FROM FACE OF CURB)	20' (W. BROAD ST.)		20.0' (W. BROAD ST.)
	14' (N. WEST)	20' (N. WEST, VC #6)	20.0' (N. WEST)
	14' TO FC (PARK AVE.)	11.2' TO PL (PARK AVE., VC #3)	17.8' TO FC, 11.2' TO PL (PARK AVE.)
SIDE	20' ADJ. TO EASTERN PROPERTY ALONG PARK AVE. RPC 51-202-016		10.0'**
REAR	NONE		N/A

*SPECIAL EXCEPTION APPROVED FOR MAXIMUM BUILDING HEIGHT OF 85'
**VARIANCE APPROVED FOR SIDE YARD SETBACK OF 10' ADJACENT TO R-1B DISTRICT FOR THE CANTILEVERED PORTION OF THE MOVIE THEATER.

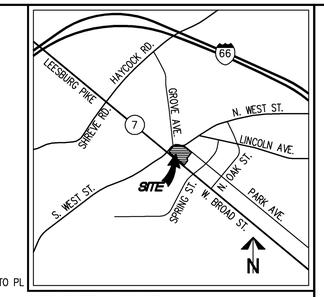

VICINITY MAP SCALE: 1"=2000'

PARKING TABULATION

USE	TOTAL PROPOSED	REQUIRED PARKING RATIO [SEC. 48-1004]		PARKING REQUIRED	PARKING PROVIDED
RESIDENTIAL (APARTMENTS)		SPACE/		SPACES	
STUDIOS	2 UNITS	1.0	UNIT	2	
1 BEDROOM & 1 BEDROOM OFFICE	219 UNITS	1.5	UNIT	329	
2 BEDROOM & 2 BEDROOM OFFICE	101 UNITS	2	UNIT	202	
TOTAL	322 UNITS				
TOTAL				**533**	
AGE RESTRICTED RESIDENTIAL		SPACE/		SPACES	
1 BEDROOM & 1 BEDROOM OFFICE	39 UNITS	1.5	UNIT	59	
2 BEDROOM & 2 BEDROOM OFFICE	33 UNITS	2.0	UNIT	66	
TOTAL	72 UNITS			0	
TOTAL				**125**	
TOTAL RESIDENTIAL PARKING PROVIDED					**516**
OFFICE		SPACE/	SF	SPACES	
PER OFFICE FLOOR AREA	5000 SF	1	450	12	
TOTAL				**12**	**16**
THEATER		SPACE/	SEAT	SPACES	
FIXED SEATS	825 SEATS	1	4	207	
TOTAL				**207**	**207**
RETAIL/RESTAURANT		SPACE/	SF	SPACES	
RETAIL/RESTAURANT SPACE	56557 SF	1	300	189	
TOTAL				**189**	**278**
OVERALL TOTAL REQUIRED				**1,066**	
			PROVIDED	**1,017**	

OVERALL REDUCTION REQUESTED 5%

NOTES:

GARAGE LEVEL	SPACES PER LEVEL
1A - MEZZANINE	57
1 - SURFACE LEVEL	55
P0	302
P1- UNDERGROUND	311
P2- UNDERGROUND	292
TOTAL	**1017**

BIKE PARKING TABULATION

BIKE PARKING REQUIREMENTS

USE	SHORT-TERM REQUIRED [SEC. 48-1004]	LONG-TERM REQUIRED [SEC. 48-1004]	TOTAL REQUIRED
OFFICE			
5000 SF	6	6	12 SPACES
			12 SPACES
RETAIL			
56557 SF	11	6	17 SPACES
			17 SPACES
MULTIFAMILY			
394 UNITS	8	158	166 SPACES
			166 SPACES
	25	**170**	
		TOTAL REQUIRED	**195 SPACES**
		TOTAL PROVIDED	**212 SPACES**

[42 SHORT-TERM IN STREETSCAPE/MARKET SQUARE, REMAINDER (170 LONG-TERM) IN PARKING STRUCTURE]

Use Type	Short-Term/Visitor/ Customer	Long-Term/Employee/ Resident
Office	3 loops (6 spaces) or 1/20,000 sq. ft. office GFA or portion thereof, whichever is greater	3 loops (6 spaces) or 1/6,000 sq. ft. office GFA or portion thereof, whichever is greater
Retail	3 loops (6 spaces) or 2/10,000 sq. ft. of retail GFA or portion thereof for the first 50,0000 sq. ft., and 1 additional for every 12,500 sq. ft. or portion thereof, whichever is greater	3 loops (6 spaces) or 1/25,000 sq. ft. of retail GFA or portion thereof, whichever is greater
Multifamily	3 loops (6 spaces) or 1/50 units or portion thereof, whichever is greater	3 loops (6 spaces) or 1/2.5 units or portion thereof, whichever is greater

Use Type	Short-Term/Visitor/ Customer	Long-Term/Employee/ Resident
Office	Class 2 or Class 3	Class 1 or 2
Retail	Highly visible exterior locations within 50 feet of the entrance	Highly visible exterior locations within 50 feet of the entrance
Multifamily	Class 2 or Class 3	Class 1 or Class 2

CLASS 1 STORAGE: LOCKED STORAGE ROOM OR CAGE
CLASS 2: PROTECTED OR COVERED
CLASS 3: LIGHT SECURITY FOR VISITORS

WALTER L. PHILLIPS INCORPORATED ESTABLISHED 1945
Engineers • Surveyors • Planners
Landscape Architects • Arborists
207 PARK AVENUE
FALLS CHURCH, VIRGINIA 22046
(703) 532-6163 Fax (703) 533-1301
www.WLPINC.com

COMMONWEALTH OF VIRGINIA BUSINESS CORPORATION PROFESSIONAL SEAL
KAREN L. S. WHITE Lic. No.041850 8/14/18

CHECKED: KW	DRAWN: AL KW, DM, BP, TT	DATE: SUB01 1/23/2015, SUB02 2/20/2014, GMP 8/21/2018, SUB03 7/10/2018 GMP ADDENDUM01 7/27/2018, SUB04 8/14/18	SCALE: NONE

NO.	DESCRIPTION	DATE
	GMP SET	6/21/18

NOTES AND ZONING TABULATIONS

FOUNDERS ROW

AT THE INTER SECTION OF WEST BROAD STREET, NORTH WEST STREET & PARK AVENUE
CITY OF FALLS CHURCH, VIRGINIA

SHEET: C-0201

REFER TO ARCHITECTURAL BUILDING PLANS FOR FINAL PROJECT DATA INFORMATION.

PROGRAM AREA - MAIN BLDG

MAIN BLDG GSF

FLOORS / LEVELS	TOTAL AREA
LEVEL 6	
CORRIDOR	6,524 SF
ELEV A1 3500#	99 SF
ELEV C1 3500#	94 SF
ELEV E1 3500#	83 SF
ELEV E2 4000#	86 SF
ELEV E5 3500#	97 SF
ELEV F1 4000#	101 SF
FA	82 SF
GAS METER - A	102 SF
GAS METER - E	167 SF
KE	215 SF
MECH	49 SF
MECH CORR.	22 SF
PET SPA	307 SF
RESIDENT STG	42 SF
SERVICE/RESIDENT STORAGE	348 SF
STAIR A1	201 SF
STAIR C1	202 SF
STAIR E1	175 SF
STAIR E5	211 SF
TELE / ELEC E1	49 SF
TELE / ELEC E2	48 SF
TRASH	317 SF
UNITS	47,731 SF
LEVELS 4-5	
STAIR A2	271 SF
	57,624 SF
LEVELS 4-5	
CORRIDOR	69,712 SF
ELEV A1 3500#	203 SF
ELEV C1 3500#	176 SF
ELEV E1 3500#	177 SF
ELEV E2 4000#	0 SF
ELEV E5 3500#	189 SF
ELEV F1 4000#	205 SF
FA	162 SF
GAS METER - A	245 SF
GAS METER - E	333 SF
KE	493 SF
MECH	99 SF
MECH CORR.	45 SF
STAIR A1	364 SF
STAIR A2	398 SF
STAIR C1	389 SF
STAIR E1	540 SF
STAIR E5	423 SF
TELE / ELEC A	105 SF
TELE / ELEC E1	98 SF
TELE / ELEC E2	96 SF
TRASH	416 SF
TRASH A1	113 SF
UNITS	123,391 SF
	198,371 SF
LEVEL 3	
AMENITY	990 SF
CORRIDOR	34,834 SF
ELEV A1 3500#	99 SF
ELEV C1 3500#	94 SF
ELEV E1 3500#	82 SF
ELEV E2 4000#	82 SF
ELEV E5 3500#	102 SF
ELEV F1 4000#	98 SF
FA	82 SF
GAS METER - A	105 SF
GAS METER - E	167 SF
KE	226 SF
MECH	47 SF
MECH CORR.	26 SF
STAIR A1	209 SF
STAIR A2	199 SF
STAIR C1	223 SF
STAIR E1	173 SF
STAIR E5	211 SF
TELE / ELEC A	53 SF
TELE / ELEC E1	49 SF
TELE / ELEC E2	48 SF
TRASH	260 SF
UNITS	55,641 SF
	94,098 SF
LEVEL 2	
AMENITY	5,619 SF
CORRIDOR	8,662 SF
ELEV A1 3500#	97 SF
ELEV C1 3500#	94 SF
ELEV E1 3500#	84 SF
ELEV E2 4000#	82 SF
ELEV E5 3500#	102 SF
ELEV E6 (OR) 3500#	96 SF
ELEV F1 4000#	105 SF
FA	81 SF
GAS METER - A	114 SF
GAS METER - E	167 SF
KE	255 SF
MECH	52 SF
MECH CORR.	22 SF
POOL EQPT	75 SF
STAIR A1	194 SF
STAIR A2	199 SF
STAIR C1	199 SF
STAIR C2	220 SF
STAIR E1	171 SF
STAIR E5	211 SF
STOR	77 SF
TELE / ELEC A	53 SF

MAIN BLDG GSF

FLOORS / LEVELS	TOTAL AREA
TELE / ELEC C	31 SF
TELE / ELEC E1	49 SF
TELE / ELEC E2	53 SF
TH C2 3500#	96 SF
TH SERV C3 4000#	122 SF
THEATER	27,394 SF
TRASH	205 SF
TRASH A1	57 SF
UNITS	60,818 SF
	105,855 SF
LEVEL 1A	
CORRIDOR	1,086 SF
ELEV A1 3500#	85 SF
ELEV C1 3500#	92 SF
ELEV E1 3500#	78 SF
ELEV E2 4000#	81 SF
ELEV E3 3500#	88 SF
ELEV E4 3500#	93 SF
ELEV E5 3500#	91 SF
ELEV E6 3500#	86 SF
GARAGE EXHAUST	113 SF
LOBBY E6	91 SF
OFFICE	4,395 SF
OFFICE ELEV D1 3500#	86 SF
OFFICE LOBBY D1	124 SF
OFFICE STAIR D1	199 SF
OFFICE STAIR D2	197 SF
PARKING - COMMERCIAL	25,707 SF
RESIDENT STG	1,417 SF
RESIDENTIAL LOBBY	1,460 SF
SERVICE/ RESIDENT STG	353 SF
STAIR A1	175 SF
STAIR A2	190 SF
STAIR C1	193 SF
STAIR C2	276 SF
STAIR E1	193 SF
STAIR E5	177 SF
TELE / ELEC C	30 SF
TH C2 3500#	94 SF
TH SERV C3 4000#	94 SF
TRASH	126 SF
UNITS	6,008 SF
	43,475 SF
LEVEL 1	
BIKE STG - COMMERCIAL	242 SF
BIKE STG - RESIDENTIAL	1,952 SF
BOH	972 SF
CORRIDOR	1,392 SF
ELEV A1 3500#	79 SF
ELEV A2 3500#	97 SF
ELEV C1 3500#	92 SF
ELEV D1 4000#	94 SF
ELEV E1 3500#	83 SF
ELEV E2 4000#	81 SF
ELEV E3 3500#	84 SF
ELEV E4 3500#	84 SF
ELEV E5 3500#	91 SF
ELEV E6 3500#	86 SF
EXIT	507 SF
FCC	151 SF
GARAGE EXHAUST	116 SF
INTAKE	148 SF
LOADING	1,117 SF
LOBBY	239 SF
LOBBY E6	91 SF
LOBBY A2	100 SF
PARKING - COMMERCIAL	28,925 SF
PKG LOBBY	160 SF
R03D	1,114 SF
R03E	2,197 SF
R04	9,520 SF
R08	3,272 SF
R10	2,896 SF
R11	2,069 SF
R12	1,490 SF
R13A	1,423 SF
R13B	2,965 SF
R13C	2,250 SF
RES LOBBY	2,825 SF
RO9	2,017 SF
STAIR A1	173 SF
STAIR A2	190 SF
STAIR C1	204 SF
STAIR C2	278 SF
STAIR E1	352 SF
STAIR E3	116 SF
STAIR E5	176 SF
TELE / ELEC C	31 SF
TH C2 3500#	94 SF
TH SERV C3 4000#	94 SF
THEATER LOBBY	4,699 SF
TRASH A1	299 SF
TRASH C1	86 SF
UNITS	6,001 SF
VEST	224 SF
	84,039 SF
LEVEL P-0	
ANCILLARY LOADING	3,569 SF
BOH	1,547 SF
ELEV A2 3500#	112 SF
ELEV C1 3500#	82 SF
ELEV C2 PIT	83 SF
ELEV D1 3500#	86 SF
ELEV E1 3500#	69 SF
ELEV E2 4000#	92 SF

MAIN BLDG GSF

FLOORS / LEVELS	TOTAL AREA
ELEV E3 3500#	78 SF
ELEV E4 3500#	78 SF
ELEV E5 3500#	93 SF
ELEV E6 PIT	83 SF
FIRE PUMP / BACK FLOW	512 SF
GARAGE EXHAUST	183 SF
GAS METER - COMMECRCIAL B	49 SF
GAS METER - ZONE #4	427 SF
GENERATOR ROOM	332 SF
INTAKE	167 SF
LOADING	3,520 SF
LOBBY A2	110 SF
LOBBY C1	97 SF
LOBBY D1	132 SF
LOBBY E1 & E2	249 SF
LOBBY E3 & E4	170 SF
LOBBY E5	67 SF
LOBBY TH SERV C3	258 SF
MAIN TELECOM	169 SF
PARKING - COMMERCIAL	72,027 SF
PARKING - RESIDENTIAL	22,797 SF
R01A	2,384 SF
R01B	2,049 SF
R02	2,153 SF
R03A	1,573 SF
R03B	1,275 SF
R03C	1,556 SF
REISDENT STG - P1-E1	196 SF
RESIDENT STG - P1-E2	199 SF
STAIR C2	392 SF
STAIR D1	201 SF
STAIR D2	212 SF
STAIR E1	193 SF
STAIR E3	179 SF
STAIR E5	180 SF
TH SERV C3 4000#	100 SF
TRASH	524 SF
	120,605 SF
LEVEL P-1	
ELEV A2 3500#	112 SF
ELEV C1 3500#	88 SF
ELEV E1 3500#	80 SF
ELEV E2 4000#	81 SF
ELEV E3 3500#	85 SF
ELEV E4 3500#	85 SF
ELEV E5 3500#	93 SF
ELEV LOBBY E3 & E4	170 SF
GAS METER (R) - COMMECRCIAL B	226 SF
INTAKE	159 SF
LOBBY A2	110 SF
LOBBY E1&E2	249 SF
LOBBY E5	204 SF
PARKING - COMMERCIAL	69,346 SF
PARKING - RESIDENTIAL	36,945 SF
RESIDENT STG	404 SF
RESIDENT STG - P1-E1	419 SF
RESIDENT STG - P1-E2	981 SF
RESIDENT STG - P1-E3	204 SF
STAIR C2	172 SF
STAIR E1	193 SF
STAIR E3	164 SF
SWM VAULT	2,016 SF
TH SERV C3 PIT	94 SF
	112,681 SF
LEVEL P-2	
ELEV A2 PIT	108 SF
ELEV C1 3500#	81 SF
ELEV E1 3500#	78 SF
ELEV E2 4000#	83 SF
ELEV E3 & E4 PIT	163 SF
ELEV E5 3500#	93 SF
GARAGE EXHAUST	220 SF
INTAKE	225 SF
LOBBY C1	98 SF
LOBBY E1 & E2	249 SF
LOBBY E5	204 SF
MAIN ELECTRIC	876 SF
PARKING - RESIDENTIAL	108,147 SF
RESIDENT STG - P2-E1	419 SF
RESIDENT STG - P2-E2	252 SF
STAIR C2	181 SF
STAIR E1	193 SF
STAIR E3	148 SF
TRANSFOMERS	2,115 SF
	113,934 SF
LEVEL 2	
KE	0 SF
LEVEL 3	
KE	0 SF
LEVEL 6	
KE	0 SF
LEVELS 4-5	
KE	0 SF
TRASH	0 SF
	0 SF
	930,683 SF

PROGRAM AREA - AR BLDG

AGE RESTRICTED BLDG GSF

FLOORS / LEVELS	TOTAL AREA
ROOF	
ELEV F1 4000#	79 SF
ELEV F2 3500#	81 SF
LOBBY	207 SF
STAIR F1	162 SF
STAIR F2	188 SF
TRASH	23 SF
	740 SF
LEVEL 6	
CORRIDOR	1,073 SF
ELEV F2 3500#	91 SF
FA	13 SF
GARAGE EXHAUST	39 SF
KE	67 SF
MECH	40 SF
STAIR F1	172 SF
STAIR F2	208 SF
TELE / ELEC F	58 SF
TRASH	64 SF
UNITS	14,749 SF
	16,573 SF
LEVELS 4-5	
CORRIDOR	2,143 SF
ELEV F2 3500#	190 SF
FA	27 SF
GARAGE EXHAUST	74 SF
KE	138 SF
MECH CORR.	77 SF
STAIR F1	331 SF
STAIR F2	379 SF
TELE / ELEC F	121 SF

AGE RESTRICTED BLDG GSF

FLOORS / LEVELS	TOTAL AREA
TRASH	133 SF
UNITS	29,909 SF
	33,521 SF
LEVEL 3	
CORRIDOR	1,072 SF
ELEV F2 3500#	91 SF
FA	13 SF
GARAGE EXHAUST	34 SF
KE	68 SF
MECH CORR.	41 SF
STAIR F1	172 SF
STAIR F2	215 SF
TELE / ELEC F	55 SF
TRASH	67 SF
UNITS	14,957 SF
	16,784 SF
LEVEL 2	
AMENITY	3,448 SF
CORRIDOR	1,055 SF
ELEV F2 3500#	99 SF
FA	17 SF
GARAGE EXHAUST	39 SF
KE	67 SF
MECH	38 SF
STAIR F1	187 SF
STAIR F2	198 SF
TELE / ELEC F	58 SF
TRASH E1	67 SF
UNITS	11,568 SF
	16,840 SF
LEVEL 1	
ELEV F1 4000#	96 SF
ELEV F2 3500#	88 SF

AGE RESTRICTED BLDG GSF

FLOORS / LEVELS	TOTAL AREA
ELEV F3 4000#	96 SF
MECH	50 SF
R05A	2,462 SF
R05B	1,682 SF
R06	5,219 SF
R07A	1,512 SF
R07B	2,012 SF
RESIDENTIAL LOBBY	1,826 SF
RETAIL BOH	1,269 SF
STAIR EXIT	221 SF
STAIR F1	171 SF
STAIR F2	186 SF
	16,890 SF
LEVEL P-0	
BIKE STG - RESIDENTIAL	762 SF
BUILDING MAINTENANCE SHOP	550 SF
ELEV F1 4000#	99 SF
ELEV F2 3500#	91 SF
ELEV F3 4000#	97 SF
GAS METER (R) - COMMERCIAL A & ZONE #2	154 SF
GAS METER - COMMERCIAL A	292 SF
GAS METER - ZONE #2	150 SF
LOBBY F1 & F2	173 SF
LOBBY F3	230 SF
PARKING - RESIDENTIAL	18,468 SF
RESIDENT STG	751 SF
STAIR EXIT	216 SF
STAIR F1	171 SF
TRASH COMPACTOR ROOM F1	351 SF
	22,555 SF
	123,902 SF

BUILDING EFFICIENCY

RESIDENTIAL EFF BY LEVEL - MAIN BLDG

AREA TYPE	TOTAL AREA	EFFICIENCY %
LEVELS 4-5		
RESIDENTIAL COMMON AREAS	271 SF	0.1%
	271 SF	0.1%
LEVEL 6		
RESIDENTIAL COMMON AREAS	9,407 SF	2.1%
RESIDENTIAL UNITS	47,731 SF	10.5%
	57,138 SF	12.6%
LEVELS 4-5		
RESIDENTIAL COMMON AREAS	74,487 SF	16.4%
RESIDENTIAL UNITS	123,391 SF	27.2%
	197,878 SF	43.6%
LEVEL 3		
RESIDENTIAL COMMON AREAS	38,232 SF	8.4%
RESIDENTIAL UNITS	55,641 SF	12.3%
	93,873 SF	20.7%
LEVEL 2		
RESIDENTIAL COMMON AREAS	17,169 SF	3.8%
RESIDENTIAL UNITS	60,818 SF	13.4%
	77,987 SF	17.2%
LEVEL 1A		
RESIDENTIAL COMMON AREAS	6,279 SF	1.4%
RESIDENTIAL UNITS	6,008 SF	1.3%
	12,287 SF	2.7%
LEVEL 1		
RESIDENTIAL COMMON AREAS	7,895 SF	1.7%
RESIDENTIAL UNITS	6,001 SF	1.3%
	13,896 SF	3.1%
LEVELS 4-5		
RESIDENTIAL COMMON AREAS	0 SF	0.0%
	0 SF	0.0%
	453,330 SF	100.0%

RESIDENTIAL EFF BY LEVEL - AGE RESTRICTED

AREA TYPE	TOTAL AREA	EFFICIENCY %
ROOF		
RESIDENTIAL COMMON AREAS	740 SF	0.9%
	740 SF	0.9%
LEVEL 6		
RESIDENTIAL COMMON AREAS	1,731 SF	2.0%
RESIDENTIAL UNITS	14,749 SF	17.0%
	16,480 SF	19.0%
LEVELS 4-5		
RESIDENTIAL COMMON AREAS	3,401 SF	3.9%
RESIDENTIAL UNITS	29,909 SF	34.5%
	33,310 SF	38.5%
LEVEL 3		
RESIDENTIAL COMMON AREAS	1,725 SF	2.0%
RESIDENTIAL UNITS	14,957 SF	17.3%
	16,682 SF	19.3%
LEVEL 2		
RESIDENTIAL COMMON AREAS	5,167 SF	6.0%
RESIDENTIAL UNITS	11,568 SF	13.4%
	16,734 SF	19.3%
LEVEL 1		
RESIDENTIAL COMMON AREAS	2,638 SF	3.0%
	2,638 SF	3.0%
	86,584 SF	100.0%

RESIDENTIAL EFF OVERALL - MAIN BLDG

AREA TYPE	TOTAL AREA	EFFICIENCY %
RESIDENTIAL UNITS	299,590 SF	66.1%
RESIDENTIAL COMMON AREAS	153,740 SF	33.9%
	453,330 SF	100.0%

RESIDENTIAL EFF OVERALL - AGE RESTRICTED

AREA TYPE	TOTAL AREA	EFFICIENCY %
RESIDENTIAL UNITS	71,182 SF	82.2%
RESIDENTIAL COMMON AREAS	15,401 SF	17.8%
	86,584 SF	100.0%

PARKING

ZONED PARKING BY USE

LEVEL	SPACES
COMMERCIAL / THEATER	
LEVEL P-1	199
LEVEL P-0	173
LEVEL 1	48
LEVEL 1A	57
	477
OFFICE	
LEVEL P-0	16
	16
RESIDENTIAL	
LEVEL P-2	292
LEVEL P-1	112
LEVEL P-0	113
	517
SURFACE	
LEVEL 1	7
	7
	1017

ZONED PARKING BY LEVEL

PARKING DESCRIPTION	SPACES
LEVEL P-2	
HANDICAP 9'-0" x 18'-0"	3
STANDARD 9'-0" x 18'-0"	289
	292
LEVEL P-1	
HANDICAP 9'-0" x 18'-0"	2
STANDARD 9'-0" x 18'-0"	309
	311
LEVEL P-0	
ELECTRIC VEHICLE 9'-0" x 18'-0"	5
ELECTRIC VEHICLE - FUTURE 9'-0" x 18'-0"	9
HANDICAP 9'-0" x 18'-0"	4
HANDICAP VAN 9'-0" x 18'-0"	2
STANDARD 9'-0" x 18'-0"	282
	302
LEVEL 1	
HANDICAP 9'-0" x 18'-0"	7
HANDICAP VAN 9'-0" x 18'-0"	2
HANDICAP VAN PARALLEL 8'-6" x 22'-0"	1
PARALLEL 8'-6" x 22'-0"	6
STANDARD 9'-0" x 18'-0"	39
	55
LEVEL 1A	
STANDARD 9'-0" x 18'-0"	57
	57
	1017

BICYCLE BY USE

USE	BIKE DESCRIPTION	BIKES
RESIDENTIAL		
LEVEL P-0	CLASS 1	32
LEVEL P-0	VERTICAL MOUNTED BIKES	18
LEVEL 1	CLASS 1	108
		158
RETAIL & OFFICE		
LEVEL 1	CLASS 1	12
		12
		170

BICYCLE BY LEVEL

USE	BIKE DESCRIPTION	BIKES
LEVEL P-0		
RESIDENTIAL	CLASS 1	32
RESIDENTIAL	VERTICAL MOUNTED BIKES	18
		50
LEVEL 1		
RESIDENTIAL	CLASS 1	108
RETAIL & OFFICE	CLASS 1	12
		120
		170

UNIT MATRIX

UNIT MATRIX SUMMARY: MAIN BUILDING

UNIT	ACCESSIBLE	FLOORS: LEVEL 1	LEVEL 1A	LEVEL 2	LEVEL 3	LEVEL 4	LEVEL 5	LEVEL 6	TOTAL UNITS	PERCENT: % UNIT	% SF	AVE UNIT SIZE	TOTAL AREA
1 BEDROOM													
A - 01		0	0	4	4	4	4	4	20	6.21%	5.23%	777.2 SF	15,544 SF
A - 01A		0	0	3	3	3	3	0	12	3.73%	2.82%	745.8 SF	8,950 SF
A - 03		0	0	1	1	1	1	1	5	1.55%	1.31%	781.2 SF	3,906 SF
A - 04		0	0	1	1	1	1	1	5	1.55%	1.14%	675.6 SF	3,378 SF
A - 04A		0	0	1	1	1	1	1	5	1.55%	1.16%	691.8 SF	3,459 SF
A - 06		0	0	2	2	4	4	4	16	4.97%	3.07%	608.6 SF	9,737 SF
A - 08		0	0	1	1	0	0	1	3	0.93%	0.96%	760.0 SF	2,280 SF
A - 09		0	0	1	1	1	1	0	4	1.24%	0.82%	650.8 SF	2,603 SF
A - 10		0	0	1	1	1	1	1	5	1.55%	1.34%	795.4 SF	3,977 SF
A - 11		1	0	0	0	0	0	0	1	0.31%	0.32%	757.5 SF	757 SF
A - 13		0	0	2	2	2	2	2	10	3.11%	1.99%	590.8 SF	5,908 SF
A - 14	ANSI A	0	1	1	0	0	0	0	2	0.62%	0.63%	751.5 SF	1,503 SF
A - 15	ANSI A	0	0	0	0	1	1	0	2	0.62%	0.32%	762.6 SF	1,525 SF
		1	1	18	17	19	19	15	90	27.95%	21.11%	.	63,528 SF
1 BEDROOM / OFFICE													
B - 01		0	0	1	1	1	1	1	5	1.55%	1.57%	936.7 SF	4,683 SF
B - 01A		0	0	4	0	2	2	5	13	4.04%	4.36%	944.4 SF	12,277 SF
B - 01B		0	0	0	4	4	4	0	12	3.73%	3.31%	984.8 SF	11,817 SF
B - 01C		0	0	0	0	1	1	1	3	0.93%	0.79%	937.2 SF	2,812 SF
B - 01D		5	5	5	0	0	0	0	15	4.66%	5.54%	878.9 SF	13,184 SF
B - 01E		1	1	1	0	0	0	0	3	0.93%	1.07%	848.1 SF	2,544 SF
B - 01J		0	0	0	0	0	0	1	1	0.31%	0.40%	940.4 SF	940 SF
B - 02		0	0	0	1	1	1	0	3	0.93%	0.75%	892.5 SF	2,678 SF
B - 02A		0	0	1	0	0	0	0	1	0.31%	0.36%	856.5 SF	856 SF
B - 02B		0	0	0	0	0	0	1	1	0.31%	0.36%	847.0 SF	847 SF
B - 03		0	0	6	5	5	5	5	26	8.07%	8.78%	994.4 SF	25,853 SF
B - 03A		0	0	0	1	1	1	0	3	0.93%	0.75%	896.6 SF	2,690 SF
B - 03B		0	0	0	2	2	2	2	8	2.48%	2.66%	1,054.2 SF	8,434 SF
B - 03C		0	0	1	1	1	1	1	5	1.55%	1.67%	995.9 SF	4,980 SF
B - 04		0	0	1	0	1	1	1	4	1.24%	1.21%	959.3 SF	3,837 SF
B - 05		0	0	1	1	1	1	1	5	1.55%	1.35%	801.7 SF	4,008 SF
B - 06		0	0	1	1	1	1	0	4	1.24%	1.14%	901.9 SF	3,608 SF
B - 08		0	0	1	3	3	3	0	10	3.11%	2.62%	891.4 SF	8,914 SF
B - 08A		0	0	2	0	0	0	0	2	0.62%	0.75%	889.2 SF	1,778 SF
B - 09		0	0	1	1	1	1	0	4	1.24%	1.17%	928.0 SF	3,712 SF
B - 12	ANSI A	0	0	0	1	0	0	0	1	0.31%	0.40%	956.2 SF	956 SF
		6	6	26	22	25	25	19	129	40.06%	41.01%	.	121,410 SF
2 BEDROOM													
C - 01		0	0	1	0	0	0	1	2	0.62%	1.07%	1,272.3 SF	2,545 SF
C - 01A		0	0	0	1	1	1	0	3	0.93%	1.11%	1,317.2 SF	3,952 SF
C - 02		0	0	1	1	1	1	1	5	1.55%	1.91%	1,138.3 SF	5,692 SF
C - 03		0	0	1	1	1	1	0	4	1.24%	1.44%	1,140.9 SF	4,564 SF
C - 04		0	0	1	1	1	1	0	4	1.24%	1.40%	1,109.8 SF	4,439 SF
C - 05		0	0	1	1	1	1	0	4	1.24%	1.37%	1,083.8 SF	4,335 SF
C - 06		0	0	1	1	1	1	0	4	1.24%	1.58%	1,250.4 SF	5,002 SF
C - 07		0	0	0	0	0	0	2	2	0.62%	0.95%	1,130.2 SF	2,260 SF
C - 07A		0	0	2	2	2	2	2	10	3.11%	3.87%	1,151.2 SF	11,512 SF
C - 09		0	0	2	2	4	4	4	16	4.97%	4.99%	989.4 SF	15,831 SF
C - 09A		0	0	1	1	1	1	0	4	1.24%	1.20%	951.4 SF	3,806 SF
C - 09B		0	0	2	2	2	2	2	10	3.11%	3.26%	969.6 SF	9,696 SF
C - 09C		0	0	1	1	1	1	1	5	1.55%	1.62%	961.8 SF	4,809 SF
C - 10		0	0	1	1	1	1	0	4	1.24%	1.28%	1,015.4 SF	4,062 SF
C - 11		0	0	1	1	1	1	1	5	1.55%	2.14%	1,274.7 SF	6,373 SF
C - 12		0	0	0	0	1	1	1	3	0.93%	0.85%	1,006.9 SF	3,021 SF
C - 15		0	0	1	1	1	1	0	4	1.24%	1.40%	1,108.1 SF	4,432 SF
C - 18	ANSI A	0	0	1	1	0	0	0	2	0.62%	0.83%	990.4 SF	1,981 SF
		0	0	18	18	20	20	15	91	28.26%	32.26%	.	98,311 SF
2 BEDROOM / OFFICE													
D - 01		0	0	1	1	1	1	1	5	1.55%	2.51%	1,491.6 SF	7,458 SF
D - 02		0	0	1	1	1	1	1	5	1.55%	2.53%	[illegible]	7,498 SF
		0	0	2	2	2	2	2	10	3.11%	5.04%	2,991.3 SF	14,956 SF
STUDIO													
S - 01		0	0	1	0	0	0	0	1	0.31%	0.27%	637.0 SF	637 SF
S - 02		0	0	1	0	0	0	0	1	0.31%	0.31%	[illegible]	747 SF
		0	0	2	0	0	0	0	2	0.62%	0.58%	[illegible]	1,384 SF
		7	7	66	59	66	66	51	322	100.00%	100.00%	52,921.8 SF	299,590 SF

UNIT MATRIX SUMMARY: AGE RESTRICTED BUILDING

UNIT	ACCESSIBLE	FLOORS: LEVEL 1	LEVEL 1A	LEVEL 2	LEVEL 3	LEVEL 4	LEVEL 5	LEVEL 6	TOTAL UNITS	PERCENT: % UNIT	% SF	AVE UNIT SIZE	TOTAL AREA
1 BEDROOM													
A - 12		0	0	2	2	2	2	2	10	13.89%	11.21%	788.2 SF	7,882 SF
A - 12A		0	0	1	1	1	1	1	5	6.94%	5.28%	742.5 SF	3,713 SF
A - 12B		0	0	1	1	1	1	1	5	6.94%	5.60%	787.0 SF	3,935 SF
		0	0	4	4	4	4	4	20	27.78%	22.09%	.	15,530 SF
1 BEDROOM / OFFICE													
B - 01F		0	0	0	1	1	1	1	4	5.56%	4.87%	913.9 SF	3,656 SF
B - 01G		0	0	2	2	2	2	2	10	13.89%	13.00%	914.1 SF	9,141 SF
B - 10		0	0	0	1	1	1	1	4	5.56%	5.13%	963.1 SF	3,852 SF
B - 11	ANSI A	0	0	1	0	0	0	0	1	1.39%	1.67%	940.8 SF	941 SF
		0	0	3	4	4	4	4	19	26.39%	24.67%	.	17,590 SF
2 BEDROOM													
C - 14		0	0	1	1	1	1	1	5	6.94%	7.76%	1,090.7 SF	5,454 SF
C - 16		0	0	2	2	2	2	2	10	13.89%	15.76%	1,108.3 SF	11,083 SF
C - 17		0	0	1	2	2	2	2	9	12.50%	15.11%	1,215.0 SF	10,935 SF
C - 19		0	0	0	0	1	1	1	3	4.17%	4.33%	1,223.2 SF	3,670 SF
C - 20	ANSI A	0	0	0	1	0	0	0	1	1.39%	2.15%	1,207.2 SF	1,207 SF
		0	0	4	6	6	6	6	28	38.89%	45.11%	.	32,348 SF
2 BEDROOM / OFFICE													
D - 03		0	0	1	1	1	1	1	5	6.94%	8.13%	1,143.0 SF	5,715 SF
		0	0	1	1	1	1	1	5	6.94%	8.13%	.	5,715 SF
		0	0	12	15	15	15	15	72	100.00%	100.00%	.	71,182 SF

RETAIL, OFFICE, THEATER

RETAIL GSF

FLOORS / LEVELS		TOTAL AREA
FAST CASUAL		
R01A	FAST CASUAL	2,384 SF
R01B	FAST CASUAL	2,049 SF
R02	FAST CASUAL	2,153 SF
R03C	COSMETICS	1,556 SF
R03D	COFFEE	1,114 SF
R03E	FAST CASUAL	2,197 SF
R05A	FAST CASUAL	2,462 SF
R05B	FAST CASUAL	1,682 SF
R07A	FAST CASUAL	1,512 SF
R07B	FAST CASUAL	2,012 SF
R13A	ICE CREAM	1,423 SF
		20,544 SF
FITNESS		
R08	BOUTIQUE FITNESS	3,272 SF
R11	SPINNING	2,069 SF
R12	BARRE	1,490 SF
		6,832 SF
FULL SERVICE RESTAURANT		
R04	CITY WORKS	9,520 SF
R06	FULL SERVICE RESTAURANT	5,219 SF
R10	FULL SERVICE RESTAURANT	2,896 SF
		17,635 SF
LOADING		
RETAIL BOH		1,269 SF
		1,269 SF
RESIDENTIAL		
REISDENT STG - P1-E1		196 SF
		196 SF
RETAIL		
R03A	BOUTIQUE	1,573 SF
R03B	EYEWEAR	1,275 SF
RO9	WINE SHOP	2,017 SF
		4,866 SF
SERVICE		
R13B	SPA	2,965 SF
R13C	SALON	2,250 SF
		5,216 SF
		56,557 SF

THEATER GSF

FLOORS / LEVELS		TOTAL AREA
THEATER		27,394 SF
THEATER LOBBY		4,699 SF
		32,094 SF

OFFICE GSF

FLOORS / LEVELS		TOTAL AREA
OFFICE ELEV D1 3500#		86 SF
OFFICE LOBBY D1		124 SF
OFFICE STAIR D1		199 SF
OFFICE STAIR D2		197 SF
OFFICE		4,395 SF
		5,000 SF

WDG

WDG ARCHITECTURE, PLLC
1025 CONNECTICUT AVENUE NW
SUITE 300
WASHINGTON DC 20036
TEL 202 857 8300
FAX 202 463 2198
E-MAIL wdg@wdgarch.com

MEP ENGINEER
R.W.SULLIVAN ENGINEERING
529 MAIN STREET
SUITE 203
BOSTON, MA 02129
TEL 617.523.8227
FAX
E-MAIL

STRUCTURAL ENGINEER
TADJER-COHEN-EDELSON & ASSOCIATES, INC.
1109 SPRING STREET
SILVER SPRING, MD 20910
TEL 301.587.1820
FAX
E-MAIL

STRUCTURAL ENGINEER
STRAND
10003 TECHNOLOGY BLVD WEST
DALLAS, TX 75220
TEL 972.620.8204
FAX
E-MAIL

FOUNDERS ROW
FALLS CHURCH, VA

NO.	DESCRIPTION	DATE
	GMP SET	6/21/18

MILL CREEK RESIDENTIAL
6701 DEMOCRACY BLVD.
SUITE 500
BETHESDA, MD 20814

SCHEMATIC DESIGN	11.21.2016	1
50% DD SET	03.15.2018	2
DESIGN DEVELOPMENT	04.12.2018	3
PERMIT / GMP	06.21.2018	4

PROFESSIONAL SEAL

© 2018 WDG PROJECT NO: WA16016

UNIT MATRIX & AREA & PARKING TABULATIONS

SCALE:

A1.20

Engineers • Surveyors • Planners
Landscape Architects • Arborists
207 PARK AVENUE
FALLS CHURCH, VIRGINIA 22046
(703) 532-6163 Fax (703) 533-1301
www.WLPINC.com

WALTER L. PHILLIPS
INCORPORATED ESTABLISHED 1945

DATE: SUB01 9/23/2016, SUB02 2/20/2018, SUB03 7/10/2018 GMP 6/21/2018, GMP ADDENDUM01 7/27/2018, SUB04 8/14/18

SCALE: NONE

DRAWN: AL,KW,DM,BP,TT

CHECKED: KW

COMMONWEALTH OF VIRGINIA
KAREN L. S. WHITE
Lic. No.041850
8/14/18
PROFESSIONAL ENGINEER

ARCHITECTURAL PROJECT DATA

FOUNDERS ROW

AT THE INTER SECTION OF WEST BROAD STREET, NORTH WEST STREET & PARK AVENUE
CITY OF FALLS CHURCH, VIRGINIA

RESOLUTION 2016-04

RESOLUTION TO GRANT A SPECIAL EXCEPTION FOR RESIDENTIAL USES WITHIN A MIXED USE DEVELOPMENT PROJECT AND TO INCREASE THE BUILDING HEIGHT WITH A BONUS OF THIRTY (30) FEET WITH A MAXIMUM HEIGHT OF EIGHTY- FIVE (85) FEET FOR A MIXED-USE DEVELOPMENT PROJECT ON APPROXIMATELY 4.3 ACRES OF LAND LOCATED AT THE NORTHEAST CORNER OF 110, 112, 112A, 212 & 212A NORTH WEST STREET, 916, 920, 922, 924, 926, 928, 930, 932 & 934, WEST BROAD STREET AND 919, 921 & 925 PARK AVENUE (REAL PROPERTY CODE NUMBERS 51-202-009 THROUGH 51-202-015, 51-202-003, 51-202-004, 51-202-005, 51-202-028 AND 51-202-028 OUTLOT) KNOWN AS "MASON ROW" ON APPLICATION BY SPECTRUM DEVELOPMENT, LLC

WHEREAS, on May 12, 2003, City Council adopted Ordinance 1734, which amended Chapter 38, "Zoning", of the Code of the City of Falls Church to amend the special exception process within the business districts to allow for appropriate mixed-uses and additional height bonuses by special exception; and

WHEREAS, an application for a Special Exception to allow residential uses within a business district in a mixed-use development project and a Special Exception for a height bonus have been submitted by Spectrum Development, LLC ("the Applicant") pursuant to Section 48-455 (1), (2) in conformance with the procedure set forth in Section 48-90 of the City Code; and

WHEREAS, a concurrent application for a comprehensive plan map change, to the Future Land Use Plan Map as an amendment from "Business" and "Low-Density Residential (6.0)" to "Mixed Use" has been submitted by the Applicant pursuant to Section 17.06-07 of the City Charter and City Council approval is required as a prerequisite for the Special Exception; and

WHEREAS, a concurrent application for an Official Zoning Map change (Rezoning) to amend the map from B-3, general business district and R-1B, medium density residential district to all B-1, limited business district has been submitted by the Applicant pursuant to Section 48-85 in conformance with the procedure set forth in Section48-86 of the City Code and City Council approval is required, as a prerequisite for the Special Exception; and

WHEREAS, the application proposes a development comprising a total building/floor area of approximately 558,707 gross square feet on approximately 4.3 acres of land and an increase in building height by up to thirty feet (30)

feet to six (6) stories or maximum of 85 feet [instead of the B-1, business district fifty-five (55) foot height maximum]. The mixed-use development is proposing and a maximum of 322 multifamily residential rental apartment units, a quality hotel, "Hilton, Hyatt, Marriott or equal quality brand with approximately 112 to 145 ~~150~~ rooms, a multi-screen 400 to 850-seat, minimum 6-screen to maximum 8-screen theater between 20,000 to 33,000 square feet and approximately 62,500 gross square feet of ground floor commercial retail/service/restaurant space facing internally along Mason Row (Mason Avenue and Market Square) and externally along West Broad Street and North West Street; of which at least 30 percent and a minimum of 20,000 gross square feet of the commercial square feet shall be food and beverage uses; approximately 5,317 square feet of office: and

WHEREAS, in order to achieve the development as proposed, the application requests a special exception for a height bonus and for the residential uses also within a mixed-use development project in a business district as shown in the Special Exception application, including the Conceptual Development Plan, dated December 9, 2015 which includes "Mason Row Mixed Use Project - Special Exception Application SUB 08; Supplemental Information and Elevation Updates", dated December 9, 2015; and

WHEREAS, the applications for the special exception and associated Comprehensive Plan and Official Zoning Map changes, have also been referred to various citizen boards and commissions for public review and comment; and

WHEREAS, the application for the special exception and associated Comprehensive Plan and Official Zoning Map changes, has been referred to the Planning Commission, which conducted a public hearing and recommended to the City Council, and this recommendation has been received and considered; and

WHEREAS, City Council has duly advertised and conducted a public hearing to receive public comment on the application for this special exception with a public hearing held on July 13, 2015, December 14, 2015 and January 11, 2016;

WHEREAS, City Council has considered the application, the requirements of Section 48-90 and Section 48-455 (1), (2) of the City Code, the recommendation of the Planning Commission, comments from boards and commissions, and public comments; and

WHEREAS, City Council considered the subject properties' unique characteristics and the community benefits derived as a result of the proposed development, and determined that this particular project is acceptable for these parcels at this time, with the understanding that a similar project might not be appropriate on other parcels; and

WHEREAS, City Council considered state law regarding special exceptions, specifically, that special exceptions may be granted by the local governing body subject to conditions pursuant to Code of Virginia Sec. 15.2-2286(A)(3) that allows their issuance "under suitable regulations and safeguards" and that each special exception case shall rest on its own merits and the uniqueness of each piece of land; and in particular, that the ratio of commercial and residential uses approved herein are unique to this site; and

WHEREAS, City Council also considered the public interest in improving the subject property as part of overall economic development efforts to stimulate commercial redevelopment and enhance the commercial tax base to support City services; and

WHEREAS, the Developer has submitted the "Voluntary Concessions, Community Benefits, Terms and Conditions" dated January 7, 2016 to the City in order to further ensure consistency with the City of Falls Church's adopted Comprehensive Plan and policies and in support of the special exception; and

WHEREAS, City Council finds that the proposed project has met the primary criteria as listed in Section 48-90, (d), (1) a, b and c of the Falls Church City Code as follows: 1) the resulting development conforms with the City's adopted Comprehensive Plan and Design Guidelines; 2) the resulting development provides for significant net new commercial square footage and allows a mix of commercial and residential uses; and 3) the resulting development provides substantial positive net new commercial and residential revenue to the City; and

WHEREAS, City Council finds that the proposed project provides significant community benefits, including, but not limited to the following:

- important, large assemblage and consolidation of numerous individually-owned properties;
- Structured garage parking, below-grade, at-grade and above grade;
- preferred hotel and theater uses and ground level storefront commercial space including Mason Row - Market Square and Mason Lane festival space;

- various community benefits including affordable housing, school capital cost contributions and vicinity street and transportation facility improvements;
- planned streetscape improvements on West Broad and North West Streets;
- financial contributions and in-kind improvements to benefit vicinity off-site recreational park and W&OD Trail improvements;
- undergrounding of overhead utilities off-site on N. West Street;
- transportation related public street and pedestrian facility crossing improvements;
- sustainable LEED Silver or equivalent buildings for the residential portions of the project and LEED or equivalent for hotel; and

WHEREAS, the commercial height bonus of up to 30 feet for the mixed-use development as generally shown in the Special Exception application, which includes the Conceptual Development Plan, dated December 9, 2015, which includes "Mason Row Mixed Use Project - Special Exception Application SUB 08; Supplemental Information and Elevation Updates", dated December 9, 2015, shall be permitted as City Council finds that the bonus shall significantly assist in the conformance with Section 48-90 (d) (1) a, b and c of the City Code, and

NOW, THEREFORE it is hereby RESOLVED by the City Council of the City of Falls Church, Virginia, that in conjunction with the associated comprehensive plan map amendment and associated rezoning action and in consideration whereof, pursuant to Sections 48-90 and 48-455 of the Falls Church City Code, that the Special Exception for residential use within the proposed mixed-use development project and height bonus within the mixed-use development project is hereby granted and approved, subject to the following conditions:

1. The Developer's Voluntary Concessions, Community Benefits, Terms and Conditions Mason Row ("Broad and West") Development, dated January 7, 2016, ("voluntary concessions"), for Special Exception for Residential Development and Height Bonus for a Mixed Use Development at the subject site, and all the terms and conditions thereof, shall be a condition for the issuance and approval of the Special Exception; and the City Manager is hereby authorized and directed to execute the voluntary concessions on behalf of the City; and

2. The development of the site shall be in conformance with the Special Exception Application dated July 24, 2015 and Conceptual Development Plans, dated December 9, 2015, which includes "Mason Row Mixed Use Project - Special Exception Application SUB 08; Supplemental Information and Elevation Updates", dated December 9, 2015 and as further modified by the VCs dated January ~~7~~ 11, 2016 *[updated Voluntary Concessions presented at meeting.]*; and

3. Construction of this project shall commence within three (3) years from date of adoption of this resolution; and

4. Violation of any of the conditions of this Special Exception, including any of the voluntary concessions, shall be grounds for revocation of the Special Exception by City Council.

Reading: 4-13-15
Adoption: 1-11-16
(TR14-28)

Voluntary Concessions dated January 11, 2016 ATTACHED

IN WITNESS WHEREOF, the foregoing was adopted by the City Council of the City of Falls Church, Virginia on January 11, 2016 as Resolution 2016-04.

Celeste Heath
Celeste Heath
City Clerk

VOLUNTARY CONCESSIONS, COMMUNITY BENEFITS, TERMS AND CONDITIONS

Spectrum Development LLC/Mason Row

AMENDED JUNE 15, 2018

In association with the rezoning approved January 11, 2016, and requested amendment to the special exception granted January 11, 2016 to allow the redevelopment of 110, 112, 112A, 212 & 212A North West Street, 916, 920, 922, 924, 926, 928, 930, 932, and 934 West Broad Street, and 919, 921 and 925 Park Avenue (Real Property Code numbers 51-02-009 through 51-202-015, 51 202-003, 51-202-004, 51-202-005, 51-202-028 and 51-202-028 outlot) (the "Subject Property"), Spectrum Development LLC (the "Owner") voluntarily proffers the following for the benefit of the community and the City of Falls Church (the "City"). The Owner acknowledges that through the special exception approval, it has been granted certain bonuses, including height and increased residential uses, and other benefits in return for its agreements as set forth below, to provide certain features, design elements, uses, services, or amenities desired by the City, including but not limited to, site design, public improvements, environmentally sustainable and energy-efficient building design, affordable housing creation, and capital contributions to City parks, library, and schools as part of the development. As used herein "Owner" shall refer to the applicant, any contract owner, the property owner, and any successors or assigns:

1. **Conceptual Development Plan:**
The Owner agrees to develop the Subject Property in conformance with (1) the Conceptual Development Plan (CDP) dated April 5, 2017 as prepared by Walter L. Phillips, Inc.; (2) the Special Exception Application Submission 08 (Drawings), including Option A for treatment of the East Façade, as shown on drawing A.2.1.a, and the Architectural Elevation Drawings ("Elevations') dated April_5, 2017 as prepared by WDG Architecture; and (3) the Transportation Management Plan (TMP) dated July, 2015 prepared by Wells & Associates. The Owner agrees that the project will include no more than 394 units in total, of which at least 72 will be age-restricted ("Active Adult 55+") and 27 will be affordable as provided for in Section 3 and Section 5 of these Voluntary Concessions. The Owner further agrees that the residential gross floor area (apartments, lobbies, amenity space and core space) in the project is capped at 460,250 square feet, and that if residential space includes loft, the loft area will be counted in determining the amount of total gross floor area for the residential portion on the project. Of the total residential space at least 88,005 square feet shall be located in a separate age-restricted apartment building ("Active Adult 55+ Community") as depicted on the Conceptual Development Plan and provided for in the concessions in Section 3 below. The City Manager may approve minor deviations from conformance with these documents, as requested by the Owner, provided the deviations do not conflict with what is specifically agreed to in these Voluntary Concessions, are consistent with the purpose and intent of the City Council's approval of the Special Exception, and are either (i) necessary to permit reasonable construction of the project, or (ii) as determined by the City Manager, improve the project's overall functioning or benefit to the City. The Owner may appeal an adverse decision by the City Manager to the City Council.

2. **Uses:**
The Owner agrees that the uses allowed on the Subject Property shall be limited to the following: a multifamily use which includes an Active Adult 55+ Community as set out in the concessions in Section 3 below and all of which are intended to be rental, but can be converted to condominiums at the discretion of the Owner, a movie theater use, an office use on the second level, and a commercial use on the ground floor. Uses shall be approximately as shown in the building square foot amounts and in the locations on the CDP. The Owner agrees to set back the townhouse apartment building on Park Avenue two feet further from the property line than is currently shown on the CDP and the Drawings.

3. **Commercial Space:**
The Owner acknowledges and agrees that the area(s) shown as commercial use(s) on the CDP cannot be converted to residential use(s) without City Council approval. In addition, commercial areas designated on the CDP shall not be used for office uses other than as specifically designated on the CDP. The Owner agrees to provide a movie theater as set out in the concessions below. Additionally the Owner commits to use commercially reasonable efforts to market the first floor commercial spaces as described in the attached "Mason Row; Retail Project Plan" prepared by the Owner and retail consultant, Streetsense (referred to as the "Retail Plan"). The Owner does hereby commit that a minimum of 25,000 square feet of the commercial gross leasable area on the ground level will be leased to food and beverage retailers, and further agrees that there shall be a restaurant on the ground floor of the Active Adult 55+ Community.

The Owner agrees that the following commercial uses that may otherwise be allowed in the B-1 zoning district shall not be permitted without the express agreement of the City Manager or on an appeal of said City Manager's decision to City Council.

Prohibited Uses:
- Disco
- Gun stores or firearm dealers, or shooting ranges
- Roller rink
- Amusement arcade
- Adult pornographic book store
- Adult pornographic theatre or amusement facility
- Facility selling or displaying pornographic materials or having such displays
- Second hand store
- Auction house
- Flea market
- Martial arts studio
- Blood bank
- Funeral home
- Outdoor housing or raising of animals
- Industrial uses (including, without limitation, any manufacturing, smelting, refining, chemical manufacturing or processing, or other manufacturing uses)
- Mining or mineral exploration or development except by non-surface means

- Car wash
- Carnival, amusement park or circus
- Off track betting establishment
- Bingo hall
- Church, temple, synagogue, mosque, or other house of worship
- Facility for the sale of paraphernalia for use with illicit drugs

The Owner further agrees that the following commercial uses that may otherwise be allowed in the B-1 zoning district shall not exceed, in total, 15% (approximately 9,400 sf) of the total commercial gross leasable area (approximately 62,500 sf not including the movie theater space) on the ground level of Mason Row without the express agreement of the City Manager or on an appeal of said City Manager's decision to City Council.

Conditional Uses:
- Food catering (as a separate commercial tenant)
- Small pet shop/dog training
- Hair styling
- Antiques
- Used clothing
- Used electronics and used video games
- Comic books
- Yoga and Pilates studio
- Spa treatments and acupuncture
- Urgent medical care
- Non-profit organizations (those not included on the prohibited list above)
- Private wealth management office
- Insurance office
- Accounting and tax services
- ABC liquor store
- Packaging and shipping store
- Copy store
- Cleaners
- Office supplies
- Child learning center
- Child fitness center/gym
- Shoe repair
- Travel services
- Wholesale merchants (as defined for BPOL taxation)

Design Requirements:

The Owner agrees that the following design standards shall be met for all retail space identified as part of the GLA in the project:

Engineers • Surveyors • Planners
Landscape Architects • Arborists
207 PARK AVENUE
FALLS CHURCH, VIRGINIA 22046
(703) 532-6163 Fax (703) 533-1301
www.WLPINC.com
WALTER L. PHILLIPS INCORPORATED ESTABLISHED 1945

COMMONWEALTH OF VIRGINIA BUSINESS NAME
KAREN L. S. WHITE
Lic. No.041850
8/14/18
PROFESSIONAL ENGINEER

SCALE: NONE
DATE: SUB01 1/23/2015, SUB02 2/26/2015, GMP 8/21/2018, SUB03 7/10/2018
GMP ADDENDUM01 7/27/2018, SUB04 8/14/18
DRAWN: AL KW, DM, BP, JT
CHECKED: KW

NO.	DESCRIPTION	DATE
	GMP SET	6/21/18

VOLUNTARY CONCESSIONS

FOUNDERS ROW

AT THE INTER SECTION OF WEST BROAD STREET, NORTH WEST STREET & PARK AVENUE
CITY OF FALLS CHURCH, VIRGINIA

SHEET: C-0203

- Retail ceiling heights: the ground floor retail spaces shall be constructed with a minimum interior ceiling height in at least 85% of the retail space (measured "slab to slab") of 16 feet in height..

- A minimum of two table service restaurants shall be located at Mason Row and no less than 50% (approximately 31,250 sf) of the total commercial gross leasable area located on the ground level (not including the movie theater space) shall have access to a ventilation shaft through the roof that meets all City Building Code requirements for restaurant use, prior to issuance for a certificate of occupancy for tenant occupancy for such spaces.

- The Owner agrees that the ground floor retail or other ground floor commercial space wall fronting Mason Avenue, Market Square, W Broad Street or N. West Street shall have an average 70% transparency (meaning a clear view from the outside to the interior space and activity and not obstructed by drapes or blinds, or by any other window coverings) for the area of any wall facing said streets that is between three (3) feet and eight (8) feet above grade. This provision is not intended to prohibit merchandise displays that are viewed from the street within the transparency area or restaurants that utilize blinds or curtains to intermittently shade customers from unwelcomed sunlight.

- The Owner agrees that all retail businesses that front W. Broad Street east of Mason Avenue and all retail businesses that front N. West Street north of the building shall have retail storefront entrances that provide retail customers ingress and egress to and from either (i) W. Broad Street or N. West Street, or (2) Market Square or Mason Avenue. Additionally, the first floor of the Active Adult 55+ Community shall also have a minimum of one retail entrance on either W. Broad Street or N. West Street.

- The Owner agrees that loading and trash removal space for the Active Adult 55+ Community will not require use of the public street unless the Owner has obtained a separate approval from the City Council The final design and the location of the loading and trash pick-up area and trash room on Park0Plan will be approved through the site plan process.

- The Owner agrees that it will use its best efforts to provide a landscaped buffer along the entire eastern façade of the project, unless the open area on the site is insufficient to provide such landscaped buffer and the adjacent property owner(s) along that façade will not agree to an easement on reasonable terms that will permit the installation of such buffer.

Site Specific Uses:

- Theater Condition:
  The Owner agrees that approval of the Special Exception by the City Council shall not be final until the City Manager states in writing to the City Council that he has determined there exists an executed copy of a lease with a movie theater tenant for

a theater brand that is part of an established chain of theaters operating in multiple locations throughout the United States. The lease shall be of a term no less than ten years for the operation of a movie theater in the space shown on the approved CDP, and that such lease shall provide for a rent commencement date that is a specific number of days, but no more than 15 months, after the Owner delivers possession of the movie theater premises to the movie theater tenant. The movie theater premises will be 20,000 to 33,000 sf; will have 6 to 8 auditoriums; and will seat 750 to 850 persons, and have sufficient parking for the seats in the final design.

The Owner agrees that building permits for tenant improvements for the movie theater will be obtained and that construction of such tenant improvements will be substantially under way before issuance of a certificate of occupancy for the last twenty (20) residential units.

4. Active Adult 55+ Community Condition:

The Owner agrees to construct an Active Adult 55+ apartment building as shown on the approved CDP that will be managed and operated to provide housing for those persons 55 years of age or older. The Active Adult 55+ Community shown in the CDP shall have no more than 72 apartments. The Owner further agrees that the Active Adult 55+ Community will at all times be managed and operated so that it meets all of the requirements of the Federal and Virginia laws as set forth in the Housing for Older Persons Act of 1995 under the Fair Housing Act and as set forth in Title 18, Administrative Code of Virginia, §135-50-210. This Act imposes the requirement that at least 80 percent of the occupied Active Adult 55+ units include at least one resident who is verified to be over the age of 55. Furthermore, this act prohibits Familial Units (Adults with children 18 years of age or younger) from claiming residence in the Active Adult 55+ community.

5. **School Capital Contribution:**
The Owner agrees to make a contribution to the City of Falls Church to offset increased school capital costs resulting from the additional residential density in the development approved through the Special Exception process, as school capital costs are outlined in the City's Adopted Capital Improvement Program. The contribution will equal $5.24 per square foot of gross residential apartment unit area in the project (excluding Active Adult 55+ and affordable dwelling units), adjusted as hereinafter provided The total contribution will be paid prior to issuance of the first residential certificate of occupancy. The Capital Contribution shall be locked as of the beginning of construction, otherwise adjusted each January 1 by the Percentage Increase in the "Consumer Price Index for All Urban Consumers (CPI-U), U. S. City Average-All Items (1982-1984=100)", published by the Bureau of Labor Statistics of the United States Department of Labor. "Percentage Increase" shall mean the percentage change in the Index published on the preceding January 1 to the Index published on the current January 1. The Cap for a reimbursement period that is less than one year shall be prorated.

6. **Affordable Housing Contribution:**
The Owner agrees to provide affordable housing on the following terms:

(a) As the Owner and the City agree is consistent with the City of Falls Church Affordable Housing Policy, the Owner will provide affordable dwelling units ("ADUs") in the project equal to six (6) percent of the total number of dwelling units (rounded up to the nearest whole number) plus three additional ADUs for a projected total of 27ADU's. The proportion of ADU's for studio; one bedroom and two bedrooms will follow the same proportionate mix for the market rate units in the project. The ADU size will be in keeping with the typical unit size in the project for each similar unit type. All ADUs will be dispersed throughout the project. If the Owner provides parking for market-rate units, the Owner shall provide at least one parking space for each comparable ADU unit. If a parking fee is imposed, the same parking fee shall apply to comparable ADU units. The Owner shall have the right to require the payment of security deposits and other deposits or fees for ADU units (with the exception of Amenity Fees for the twenty-four 60% AMI ADUs) that are also charged to market-rate Units. Tenants of the all ADUs shall have access to the same amenities as market rate tenants.

(b) The Owner agrees to record Restrictive Covenants among the land records of the Clerk of the Circuit Court of Arlington County, which shall define terms and conditions of the ADUs as such terms and conditions are agreed to in these Voluntary Concessions regarding issues including, but not limited to, price control periods and owner/renter occupancy and the matters agreed to in these voluntary concessions. These Covenants shall run with the land and be an encumbrance on the ADUs. The Covenants shall be recorded with the City's land records in Arlington County, and evidence of such recordation will be provided to the Zoning Administrator before a Certificate of Occupancy is issued for any dwelling unit in the project.

(c) The Owner will rent the ADUs directly or through its designated agent to qualified tenants, as determined by the City. The City will regulate and establish ADU qualification priorities and evaluate and qualify prospective applicants in accordance with the Affordable Unit Program official administrative procedures and regulations.

(d) The monthly rent for the ADUs will be set by the Housing Commission with reference to the U.S. Department of Housing and Urban Development ("HUD") Washington Primary Metropolitan Statistical Area ("PMSA") area median household income ("AMI"). The ADU's that are included in the six (6) percent of total units shall be offered for rents that are affordable to households whose income is no more than 60% of HUD PMSA AMI. The three (3) additional ADU's shall be offered for rents that are affordable to households whose income is no more than 80% of HUD PMSA AMI. Such rents, subject to changes permitted by this **Voluntary Concession 5(d)** will be in effect for the life of the Project. ADU monthly rent shall include an additional amount as calculated by the percentage increase in AMI, but not less than the original ADU monthly rents listed above.

(e) If any ADU rental units are marketed for sale as individually and separately owned condominiums within 20 years after the certificate of occupancy is issued for the residential building, then such ADU units will become home ownership units subjected to the conditions in **Voluntary Concession 5(g)** below. The City will be notified a minimum of 120 days prior to the time of sale of any condominium that is part of the project and is an ADU. All ADUs which the Owner desires to sell will be made available for sale within

the six-month period. Tenants of individual ADU units will be given the right to purchase their individual unit at prices established under **Voluntary Concession 5(g)**. ADU tenants opting not to purchase will receive relocation benefits from the Owner as outlined in the City of Falls Church Voluntary Relocation policy.

(f) If sold as a condominium, the Owner agrees to use commercially reasonable efforts to reduce and minimize condominium fees for such ADUs as allowed by the Virginia Condominium Act and applicable law. Upon written notification by the Owner (as outlined by the City) that an ADU is available for sale, the City or its designee will have the right of first offering to purchase the for-sale ADU for a 60-day purchase offer period following delivery of such written notification to the City Manager. In the event the City does not exercise such right to purchase the ADU or ultimately to close on the sale of the ADU, the ADU shall be offered for sale exclusively to City qualified and designated non-profit organizations for a period of 30 days.

(g) In the event that the ADU is not sold as outlined above, the Owner will be entitled to sell the ADU without further restrictions, except as set forth in these Voluntary Concessions document at market rates. Net sale proceeds received by the Owner in excess of the ADU price will be divided equally between the City and the Owner. The Owner agrees that the ADU sales price will be set by the Housing Commission with reference to the HUD PMSA AMI at a sales price that are affordable to households whose income is no more than 65% of HUD PMSA AMI for twenty ADU's and 80% of HUD PMSA AMI for three ADU's.

(h) The ADU sales price will include an additional amount as calculated by the percentage increase in HUD median income at the time building permits are issued, but not less than the original sales prices listed above. The limitations on sale of ADUs will apply for a period of twenty years following the initial sale and with resale within that first twenty years of each subsequent ADU owner's date of purchase.

(i) ADU tenants/owners will have the same duties, rights and privileges as all other tenants/owners in the project, except as such ADU duties, rights and privileges are expressly altered by these voluntary concessions.

(j) A minimum of one of the ADU units shall be accessible as defined by federal law. Additionally, as provided by federal law, all ADU and market-rate units shall be ADA adaptable.

(k) The Owner will comply with all applicable fair housing laws.

(l) Prior to issuance of the first residential occupancy permit for the project, and Again upon the Twenty (20) year anniversary of the issuance of the first residential occupancy permit and prior to the Twenty One (21) year anniversary, and upon the written agreement of the City, the Owner may make a cash contribution to the City's housing trust fund in lieu of providing some or all of the ADUs described in this Voluntary Concession. The amount of the cash shall be mutually agreed upon by the City and the Owner. If the City and the Owner cannot mutually agree upon a contribution amount, then the Owner will provide ADUs in conformance with this Voluntary Concession.

7. **Pedestrian Oriented Design Elements:**

Streetscape
The Owner agrees that, in order to create a more pedestrian-oriented environment, to help preserve and protect the character of the neighborhood, and to beautify W. Broad Street, N. West Street and Park Avenue, streetscape improvements will be constructed and furnished by the Owner along W. Broad Street (pursuant to the City's adopted Streetscape Plan for W. Broad Street), N. West Street and Park Avenue and will be located on property on which the City has a fee interest for public street purposes, or on property which is owned by the Northern Virginia Regional Park Authority. In the event the existing dedicated area is insufficient to provide such streetscape, the Owner agrees to dedicate, or place in an easement, sufficient property, as shown in the CDP for public street purposes, prior to issuance of the first certificate of occupancy for the project. The improvements will conform to what is called for in the CDP. The Owner further agrees that a building setback of at least 20 feet from the face of curb will be maintained on all street frontages on W, Broad Street and N. West Street. The owner agrees there will be a 10 foot clear area for pedestrian travel ("Clear Sidewalk") along the entire streetscape on W, Broad Street and N. West Street; provided however, in instances where outdoor dining is to be located, and obstructions such as tree pits prevent the required Clear Sidewalk, modifications to the streetscape or a decrease in the required Clear Sidewalk to not less than 6 feet shall be permitted to allow a restaurant tenant a commercially reasonable amount of space for outdoor dining.

The Owner agrees to maintain the streetscape improvements (including street trees but excluding the maintenance of and cost of electricity for City standard streetlights) constructed as part of this project as long as the project remains. The terms of such maintenance responsibilities will be set forth in a Streetscape Maintenance Agreement to be negotiated between the Owner and the City, which agreement will be finalized, approved by the City Manager, and executed by the Owner prior to issuance of a Certificate of Occupancy for any occupiable space in the project.

The Owner agrees to provide two, 2" empty conduits for fiber optic cable, for use by the City, to run under the West Broad Street sidewalks and crosswalks constructed by the Owner.

Market Square
The Owner agrees to construct and maintain the surface level plaza and public space labeled Market Square in the CDP with the proposed features and amenities in Market Square to be defined with final Site Plan Design. The Owner also commits to providing a water feature in the Market Square as approve by the Planning Commission in the final Site Plan.

Bus Stop
The Owner agrees to construct a bus stop including a shelter with appropriate signage, shelter, and landing pad amenities at a location as generally shown on the CDP, but with the final location to be determined in coordination with the City Manager as being

consistent with the City's Bus Stop & Shelter Plan during Site Plan approval. The bus stop design and amenities shall be included in the Site Plan approval, and will be in conformance with the City's adopted Bus Stop & Shelter Plan, which provides specifications and target locations for such bus stops. The shelter shall include conduit and electrical service to allow for installation of a real time bus information sign. The Owner further agrees that, in lieu of building the shelter, and at the discretion of City, the Owner shall pay the City $30,000 prior to the issuance of building permits for the project, as its contribution toward a bus shelter elsewhere in the City.

Undergrounding of Utilities
The Owner agrees to place all on-site utilities underground except for switchgear equipment and transformers as provided below. The Owner agrees to obtain the City Manager's approval of a utility undergrounding plan and layout that meets the standards of this condition and that meets any requirements of the applicable public utility and the City, before issuance of any Building Permit for the Project. The Owner agrees to work directly with the Utility Companies to contract and arrange for the undergrounding of overhead utilities. In addition, the Owner will coordinate its efforts with the City's plans for undergrounding utility poles in the vicinity of the subject property. The final location of switchgear equipment and transformers in underground vaults, adjacent to buildings or above ground will be determined during Site Plan Approval among the Owner, City Public Works and Virginia Dominion Power. The Owner agrees that any switchgear equipment or transformers placed above ground will have vegetative or other decorative screening sufficient that the switchgear equipment and transformers cannot be seen from the right of way.

The Owner agrees to underground the three utility poles off site along a portion of the north side of N. West Street between Grove Avenue and the W&OD trail crossing on N. West Street subject to permission being granted by the Northern Virginia Regional Park Authority ('NVRPA"). The Owner agrees to restore W&OD landscaping disturbed by the Project's utility undergrounding and pedestrian improvements, and plant 2.5-inch caliper trees at 30-foot spacing adjacent to all sidewalks constructed by the Project on the north sides of N. West Street, replacing existing landscaping where necessary to install the new trees. The trees shall match the Project's Park Avenue street trees, if compatible with remaining utilities.

Pedestrian Improvements, Connection and Ways
The Owner agrees to construct ADA-compliant pedestrian improvements as shown on the CDP which will include: (i) installation of crosswalks at N. West and Park Avenue intersection, (ii) installation of pedestrian crosswalk including median island for refuge across N. West Street at Grove Avenue intersection, (iii) installation of new crosswalks on two legs of the 4-way N. West and W. Broad intersection; iv) installation of crosswalk across W. Broad at the eastern vehicular access point of the property, and v) construct improvements to the W&OD trail crossing on Grove Avenue and N. West Street.

7. **Environmental Improvements:**

Green Building Criteria: National Green Building Standard ("NGBS"). The Owner agrees to have the Subject Project designed such that it will achieve a green building certification level of NGBS Silver for the multi-family portion of the project, including the Active Adult 55+ apartments. Prior to release of the final site plan, the Owner will provide the City with evidence of the hiring of an accredited verifier ("Verifier") who has registered the project with Home Innovation Research Labs. The Owner will provide evidence to the City of submission of design information to the Verifier and scheduling of a mandatory inspection prior to installation of drywall. Prior to issuance of the first certificate of occupancy for residential tenant occupancy of the Subject Property, the Owner will provide evidence to the City of submission of materials for the construction phase to Home Innovation Research Labs, the scheduling of the final inspection and the necessary documentation to seek official NGBS Silver certification within six months of obtaining the final certificate of occupancy for residential tenant occupancy of the Subject Property. The Owner agrees that evidence of such submission will be provided to the Zoning Administrator as required in this **Voluntary Concession 7.** Prior to the issuance of the first certificate of occupancy for tenant occupancy, the Owner will provide the City with a **$50,000** letter of credit which includes terms approved in advance by the City Manager to assure the City that the Owner will satisfy its obligations under this paragraph to achieve NGBS Silver certification. Such letter of credit will be returned to Owner if the intended NGBS Silver certification is achieved within three years after the issuance of a certificate of occupancy for the last residential unit. If the project does not achieve the intended NGBS Silver certification within three years after the issuance of a certificate of occupancy for the last residential unit, the City will redeem the letter of credit to be used for environmental improvements in the City.

Future Solar Panels: The Owner agrees to aggregate rooftop mechanical systems to the best extent possible, and to take into consideration the possibility that in the future an opportunity may arise for installation of rooftop solar panels to capture solar energy to be sold to the grid. In such future event the Owner agrees to a good faith evaluation of the feasibility of allowing the installation of solar panels for providing solar energy to the grid; provided however, the Owner reserves the right to the future installation of solar panels to provide solar energy to be consumed exclusively by the project.

Electric Vehicle Charging Station: The Owner agrees that a minimum of five (5) charging stations for electric vehicles will be provided in the project parking garage. The Owner further agrees to provide conduit for the future installation of ten (10) additional charging stations for electrical vehicles. The location of the charging station will be determined at Site Plan Approval.

Storm Drainage and Runoff: The Owner agrees that the development will meet the water quantity and quality requirements by the State, effective July 1, 2014, to reduce the phosphorus runoff of the equivalent existing impervious area on the site by 20%, and for any additional impervious area beyond existing, to release a maximum phosphorus of 0.41 lbs/ac/yr. Additionally, the Owner agrees to reduce the overall runoff from the site to meet the Channel Protection and Flood Protection requirements from the State. These requirements will be met through water quality treatment utilizing approved BMP

Clearinghouse methods, and with onsite detention.

Removal of Contaminated Soil: During construction, the Owner agrees to remove contaminated soils from the site and transport the same to a site authorized and able to handle such contaminated soils in accordance with applicable environmental state and federal regulations. The Owner agrees to provide documentation of compliance with this requirement to the City before issuance of any permit for above-grade construction.

8. **Installation of Vegetation:** The Owner agrees that the vegetation installed for the project will consist of native and regionally adapted species with a majority being from the City's list of recommended plants. Final sizes, species and placement will be determined at Site Plan Approval. Plant materials shall be at least the following sizes at installation:

- Evergreen trees (8 to 10 feet in height at planting)
- Shade trees (minimum 3.5 inch caliper, 16 feet in height at planting on W Broad Street and minimum 2.5 inch caliper otherwise)
- Shrubs (minimum spread 18 to 24 inches)

In the event a substitution of approved native plants is required to enable the Owner to meet NGBS criteria, the City Manager or his designee may approve a substitute plant or procedure called for in this **Voluntary Concession 8** to meet the requirements for NGBS certification, if he finds the substitute plant is as hardy and has a similar growth habit to the original plant. The timing of installation of vegetation shall be determined during the Site Plan Approval. The City Arborist may allow modification to the timing of instillation based on the planting season, availability of plant materials, or weather, which may not permit installation of plant materials and/or street trees by the required timing.

9. **Lighting:** The Owner agrees that all exterior lighting for the Subject Property shall comply with the City Ordinances with respect to spill over to residential neighborhood north and east of the project, and exterior lighting shall be shielded and directed away from any adjacent residential property. Any building mounted signs which face the residential neighborhood to the north and east shall not be internally illuminated with translucent panels. The lighting plan for exterior lighting on N. West Street and Park Avenue that is visible by residential neighborhoods will incorporate dark sky lighting principles in accordance with the standards of the International DarkSky Association.

10. **Stormwater & Sanitary Sewer Capacity Expansion:** The Owner agrees, at the Owner's expense, to reline or construct new 15 inch diameter storm sewer line(s) between existing storm structure 879 and existing storm structure 2266, to provide sufficient capacity for the development. Such sewer line design and construction will be built according to the specifications of the City Public Works Department, and will be completed before obtaining the first certificate of occupancy for the project.

Sanitary Sewer: The Owner agrees to conduct a sewer capacity analysis by a qualified engineer from structure 70 to structure 25 and structure 70 to 144. During Site Plan the Owner and City Public Works will determine the sanitary sewer improvements that are

WALTER L. PHILLIPS INCORPORATED ESTABLISHED 1945
Engineers • Surveyors • Planners
Landscape Architects • Arborists
207 PARK AVENUE
FALLS CHURCH, VIRGINIA 22046
(703) 532-6163 Fax (703) 533-1301
www.WLPINC.com

COMMONWEALTH OF VIRGINIA BUSINESS CORPORATION PROFESSIONAL ENGINEER
KAREN L. S. WHITE
Lic. No.041850
8/14/18

SCALE: NONE
DATE:SUB01 1/23/2015, SUB02 2/26/2016, GMP 8/21/2018, SUB03 7/10/2018
GMP ADDENDUM01 7/27/2018, SUB04 8/14/18
DRAWN: AL KW, DM, BP, JT
CHECKED: KW

NO.	DESCRIPTION	DATE
	GMP SET	6/21/18

VOLUNTARY CONCESSIONS

FOUNDERS ROW

AT THE INTER SECTION OF WEST BROAD STREET,
NORTH WEST STREET & PARK AVENUE
CITY OF FALLS CHURCH, VIRGINIA

SHEET: C-0204

necessary to alleviate capacity concerns identified after development flows are modeled. The design and construction costs to perform necessary improvements (excluding capacity analysis) will be determined during Site Plan Approval. The Owner agrees to design and construct the system improvements. The City will waive part or all of Sewer Availability fees in an amount equal to the verified costs of design and construction of said improvements.

11. **Transportation Improvements:**
The Owner agrees that the transportation improvements shown on the CDP are subject to further design work, and to determinations as to what configurations and traffic systems will work best at each location. Therefore, the Owner agrees to work collaboratively with the City to determine the precise nature of the transportation improvements that it will provide, and that such improvements may be different from what is shown on the CDP. The owner further agrees that all changes to the Transportation Improvements described below and in the CDP will be subject to approval of the City Manager, and ultimately to the approval of the Planning Commission through the site plan process. The Owner agrees to pay the cost of at least the number of traffic signals called for in the December 9, 2015 submission. The Owner agrees that all transportation improvements proposed to the Planning Commission at site plan shall be approved by the City Manager.

Traffic Signals: The Owner agrees to install a traffic signal at the Mason Avenue, N. West and Park Avenue intersection and at the eastern garage entrance to the development on W. Broad Street as shown on the CDP as may be warranted and/or approved by the City. The Owner will be responsible for the design, Traffic Impact Assessment, warrant study, easement/right-of-way acquisition, and installation of these traffic signals. The Owner shall be found to have fulfilled this condition upon approval of the traffic signal as fully operational by the City Manager. The Owner agrees to obtain the City Manager's approval of the traffic signals as fully operational before issuance of the first certificates of occupancy for any residential building for which a certificate of occupancy is issued, provided the City review process is reasonably diligent and not delayed by VDOT review. In the event there is any delay due to VDOT review, the City Manager shall permit issuance of such certificate of occupancy if the Owner provides reasonable assurances that it will diligently pursue construction of the traffic signals called for in this Voluntary Concession as approved by the City.

Street Capacity and Safety Improvements The Owner agrees to (i) realign the Mason Avenue, N. West and Park Avenue intersection, (ii) realign the W&OD trail to cross N. West Street at the traffic signal, (iii) realign the W&OD Trail to cross Grove Avenue at an approximate 90 degree angle to Grove Avenue, construct a raised Trail crossing and add bump outs to reduce the road width of Grove Avenue at the W&OD Trail, iv) add a westbound only right turn-lane continuing onto N. West Street for the south approach on N. West Street to the intersection with Park Avenue/Mason Avenue, (v) add an additional east bound turn lane onto W. Broad for the south approach on N. West to the intersection, (vi) modify and extend the West Broad eastbound left turn lane approaching the signalized entrance to the parking garage, and (vii) add a northbound lane for northbound traffic on N. West Street that provides for a westbound left turn into the Wells Fargo parking lot and provides for a northwest left turn

onto Grove Avenue, all as shown on the CDP. Implementation of the foregoing traffic signals and lane improvement designs are subject to final site engineering, signal design, and VDOT review and as the case may require, City and/or Northern Virginia Regional Park Authority approval.

The Owner agrees to construct three speed tables (or humps) to calm traffic on Grove Avenue at locations designated and approved by the City.

The Owner agrees to mill and repave: West Broad Street from the centerline to curb along the entire property frontage and the eastbound lanes from centerline to curb along the proposed median modifications; N. West Street from curb to curb along the property frontage; and Park Avenue from curb to the curb along the property frontage. The Owner agrees that paving work will be done per paving specifications provided by the City Public Works Department and will be completed prior to the issuance of any certificate of occupancy for any of the last twenty residential units.

The Owner agrees to replace and reconstruct sidewalk sections that were damaged by project construction at the end of the construction phase of the project, per specifications provided by the City Public Works Department.

12. **Parking Garage:** The Owner agrees that any parking garage walls that are visible from, and across a street from, a single family home, shall be at least 42 inches high, so as to block headlights of vehicles parking in the garage from shining across the street.

The Owner further agrees that it will enter into an agreement with the St. James Catholic Church to provide for 50 spaces to be available for Church use on Sundays from 7:00 am until 1:00 pm at no charge. Provided, however, that should the Owner be unable to reach agreement with the Church for use of the spaces on reasonable terms, after notifying the City Manager of that inability and working with the City Manager to resolve the impasse, then the Owner shall not be obligated to provide such spaces, but will provide such number of spaces for which a reasonable agreement can be reached.

13. **Transportation Demand Management (TDM) and Parking Management Plan:** The Owner agrees to develop and implement a TDM program as referenced in the Transportation Management Plan that was submitted with the special exception application. The Owner agrees to obtain the City Manager's approval of the TDM program as meeting the standards of this VC and as likely to achieve the goals listed below, before site plan approval. The Owner agrees to implement the TDM program and Parking Management Plan, together, in a way that achieves the following goals: (i) reduce onsite parking demand by 13 percent from City standards, (ii) reduce the number of peak hour vehicle trips by 25 percent from ITE Trip Generation Model predictions, and (iii) achieve a minimum non-Single Occupancy Vehicle (SOV) mode share of 47 percent. The TDM program will include a list of infrastructure and incentives to be provided as well as monitoring programs and additional techniques to be administered in the event performance goals are not achieved. In addition, the TDM program will categorize infrastructure, techniques and incentives (hereafter collectively referred to as "elements") as falling into one or more of four categories: (1) Site Design, Infrastructure and Options; (2) Promotion, education and incentives; (3) Monitoring and Enforcement; and/or (4)

Adaptive Management. The Owner agrees to work with the City Manager to reach agreement as to how the elements will be used at any given time. The developer agrees that, for the first two years of the operation of the apartment building, the TDM program, as implemented, will include one (1) shuttle to the Metro that serves the apartment residents and the residents of the age restricted building, and any decisions to cancel or modify the apartment shuttle service after that two year period will be made with the City Manager's approval, which shall not be unreasonably denied and shall be made according to criteria as set forth in and in conformance with the administration of the TDM and Parking Management Plan. The TDM program will conform to these documents and the CDP and will be finalized and approved as part of the Site Plan process. In addition, the Owner will develop and implement a Parking Management Plan, which the Owner agrees to finalize and obtain approval for as part of Site Plan approval. The Owner further agrees that the Parking Management Plan will meet all City parking standards in effect at the time of Site Plan approval.

Access to Property for Monitoring of Parking Utilization and Monitoring of TDM and Parking Management Plans: The Owner agrees that City of Falls Church staff upon prior written notice to the Owner's designated representative will have access to the garage(s) on the Subject Property at all times to conduct parking utilization counts and to monitor compliance with the TDM and Parking Management Plans.

14. **On-Street Parking Restrictions:** As part of the conditions to employment for persons working in businesses located at the project, the Owner agrees that no persons employed on the Subject Property will be permitted to park on City streets during their working hours. The Owner agrees to make available sufficient parking spaces on the property for all employees working at the project and to require all employees who drive to work on the Subject Property to park in the parking garage on the Subject Property during their shift.

15. **Bicycle Parking, Storage and BikeShare:**

Bike Parking and Storage. The Owner agrees to provide Class 3 visitor bike racks as shown on the CDP and Class 1 bike storage consistent with Arlington County bicycle parking standards and requirements, finalized and approved as part of Site Plan approval.

BikeShare The Owner agrees to grant an easement to the City for installation and operation of a bike share facility at the location shown on the CDP. Provided, however, that if the City Manager and the Owner agree that a different location will improve usage of the station and will provide better transportation within the City, then they may agree to a different location finalized as part of Site Plan approval. Further, the Owner agrees to reimburse the City for the full amount of the actual costs charged to the City for operation and maintenance of the BikeShare facility. The annual reimbursement will be made every January 1 after installation of the BikeShare facility for the life of the project or until the discontinuation of the BikeShare facility at the Subject Property.

16. **Post-Development Traffic Study and Improvements:** The Owner agrees to pay the cost of a post-development traffic study and improvements, up to a total of **$50,000.** The update will be conducted approximately twelve months after completion of the project. The scope of the study will be finalized with City staff and may include an analysis of post-development parking and traffic patterns, volumes and impacts, as well as neighborhood pass- through traffic and potential traffic calming strategies, as warranted. In the event the Owner fails to complete the traffic study and improvements by a date that is two years after issuance of the first certificate of occupancy for any space on the top floor of the building, the Owner agrees to pay **$50,000** to the City. The Owner agrees that such amount will be due, without notice from the City, on the date that is twenty-five months after issuance of the first certificate of occupancy for any space on the top floor of the building.

17. **Parks and Recreation Contribution:** In return for various benefits to the Owner granted through the special exception process and to ameliorate the reduction of open space in the City resulting from the Special Exception Approval, the Owner agrees to increase the environmental sustainability of its project by contributing to the City's parks. The Owner agrees to provide a contribution to the City of **$500** per residential unit (excluding ADUs) in support of community improvements and future planned upgrades to City owned Parks in the area, adjusted as hereinafter provided. The total contribution will be paid prior to issuance of the first residential certificate of occupancy. The Capital Contribution shall be locked as of the beginning of construction, otherwise adjusted each January 1 by the Percentage Increase in the "Consumer Price Index for All Urban Consumers (CPI-U), U. S. City Average-All Items (1982-1984=100)", published by the Bureau of Labor Statistics of the United States Department of Labor. "Percentage Increase" shall mean the percentage change in the Index published on the preceding January 1 to the Index published on the current January 1. The Cap for a reimbursement period that is less than one year shall be prorated.

18. **Public Art and Art Space:** The Owner agrees to make a **$25,000** contribution to The Little City C.A.T.C.H Foundation (C.A.T.C.H.). The contribution shall be used by the Foundation to fund grants to organizations that desire to stage art, history or cultural events and other performance activities in the public space at Mason Row. The Owner agrees to provide evidence of such payment having been made prior to issuance of the first residential certificate of occupancy for the Project. The Owner also agrees to make the Market Square public space available to C.A.T.C.H as a venue for C.A.T.C. H. to produce and manage a minimum of four special events per year. The Owner agrees to provide the name and telephone number in writing, of a person the Owner will designate to serve as a liaison to C.A.T.C.H., to the City Manager and to the C.A.T.C.H. chair person. This Owner representative will work with C.A.T.C.H. on logistics and marketing of the special events.

The Owner also agrees to provide art as shown on Option A for treatment of the East Façade, as shown on drawing A.2.1.a, dated December 9, 2015.

19. **Falls Church Public Library Contribution:** In return for various benefits to the Owner granted through the special exception process and to ameliorate the effect on the

community of the additional residential density approved through the special exception process on the community, the Owner agrees to provide, as a service for the community, a contribution to the City's public libraries. The Owner agrees to make a capital contribution for public library construction. The contribution will equal **$0.62** per square foot of gross residential apartment unit area in the project (excluding affordable dwelling units), adjusted as hereinafter provided. Such payment shall be made prior to issuance of the first residential certificate of occupancy for the Project. The Capital Contribution shall be locked as of the beginning of construction, otherwise adjusted each January 1 by the Percentage Increase in the "Consumer Price Index for All Urban Consumers (CPI-U), U. S. City Average-All Items (1982-1984=100)", published by the Bureau of Labor Statistics of the United States Department of Labor. "Percentage Increase" shall mean the percentage change in the Index published on the preceding January 1 to the Index published on the current January 1. The Cap for a reimbursement period that is less than one year shall be prorated.

20. **Construction Management:**

Construction Parking and Staging Plan: Prior to issuance of any demolition and/or building permits the Owner agrees to prepare, submit, and obtain the City Manager's approval of a demolition and staging plan for the project. All demolition and construction of the project shall be done in conformance with the approved demolition and staging plan. Once a contractor has been selected for the project, the Owner will prepare a Construction Parking Plan and a Construction Traffic and Staging Plan to be enforced by the Owner for the entire the construction phase of the project, and to obtain the City Manager's approval of the plan as providing sufficient parking or other transportation services for working to the site, and not having an adverse impact on traffic safety, prior to the issuance of any building permit for the project. The Owner acknowledges and agrees that violations of these Plans during construction can result in a Stop Work Order and other enforcement measures by the City.

Community Liaison: The Owner agrees to designate a representative who is physically present on a regular basis on the Subject Property to serve as a liaison to the community for the period leading up to the issuance of the first Certificate of Occupancy and for two years thereafter. The Owner agrees to provide the name and telephone number of the liaison, in writing, to the City Manager prior to commencement of any work on the site. The Owner agrees to have the representative schedule meeting with the community, at an accessible location, no less frequently than quarterly. The Owner further agrees to hold such meetings, after notifying the City Manager, and the citizens at least ten days prior to the date of such meeting, and to permit citizens to speak at the meeting to air their concerns.

Excavation Monitoring: The Owner agrees to continuously monitor for soil movement and structural damage to adjacent structures during and after excavation for the project. Structures within a distance equivalent to or less than the depth of the excavation plus 10 feet will be surveyed by the Owner for pre-development conditions and compared to post-development conditions. For such structures, the Owner agrees to provide insurance coverage for damage caused by excavations or construction activities, as independently verified by a third party engineering consultant provided by the Owner. In no way will this

provision limit the liability of the Owner or its contractors for damages caused by construction activity.

Sidewalk Accessibility: The Owner agrees to maintain safe pedestrian walkways throughout construction and thereafter, and to ensure that such walkways are, at all times, separated from street traffic. Sidewalks shall not be completely closed on either side of the street, unless the City Manager or his designee approves such closing, after finding that the Owner (1) cannot reasonably provide such a pedestrian walkway, (2) will provide clear signs and access to the sidewalk on the other side of the street, and (3) will manage the closure so that the pedestrian walkway is not closed for more than 15 consecutive days.

Pest Control: The Owner agrees to contract with a certified pest control company licensed to do such business in the Commonwealth of Virginia for a thorough extermination of any pests and/or rodents that may be present on the Subject Property prior to the start of demolition work and/or any other land disturbing activities, and throughout construction.

21. **Public Safety:**

Public Safety Radio: The Owner agrees to ensure that all buildings and parking garages on the Subject Property are constructed in a manner that permit public safety radio signals to be transmitted and received throughout all areas within the building and from those areas to all outdoor areas of the property that is the subject of the Special Exception. The Owner will install the necessary equipment and, with at least five days' notice to the City Manager, perform a radio transmission test upon completion of the project, but prior to issuance of the first Certificate of Occupancy, in order to establish that there exists the ability to transmit and receive public safety radio signals from the interior of the building and parking garages, including the subterranean levels. The Owner agrees to permit the City Manager or his designee to be present at the site during the tests and to verify the results. Should the test fail, the Owner will find and implement a solution acceptable to the City so as to resolve the problem with 90 days of the test.

Life Safety: To provide building safety for residents and responders during an emergency and to have the appropriate resilience to meet the demands for community safety, the Owner agrees to provide:

A. **Emergency Generator:** Natural gas emergency generator sized to accommodate the following loads (all at one time) for the Subject Property:

- Fire alarm system;
- Fire pump, if equipped;
- Emergency hall and exiting lighting;
- One elevator for each building if one exists:
- Domestic water pumps, if equipped; and
- Sump pumps.

B. Fire command center with control and annunciation of elevators, generator, fire pump and HVAC systems, including a separate cooling system for the command center.

D. Automatic smoke detection for utility and other rooms not typically occupied.

Driveway/Ramp Load Capacity: Mason Avenue will be engineered and constructed to support the weight of, and permit passage of, a 60,000-pound ladder truck as currently used by the fire department.

Theater Life Safety Plan. During the Site Plan phase the Owner will prepare and submit a Theater Life Safety Plan.

22. **Easements:** The Owner agrees to provide such Easements to the City, in a form and substance as approved by the City Manager, as are shown on the CDP

23. **Other Terms and Conditions:**

Owner Acknowledgements: The Owner acknowledges, understands and agrees that the Subject Property will be developed in accordance with the applications approved by the City Council for the Subject Property and in full compliance with all applicable laws, codes, ordinances, charters, statutes, rules, regulations, agreements, and commitments.

The Owner acknowledges and agrees that the Special Exception, as granted, runs with the land and is not transferable to other land.

The Owner acknowledges that the Special Exception will automatically expire without notice, 18 months after the date of approval unless the use has been established or an above-grade building permit has been issued and construction has commenced and been diligently pursued, in accordance with Section 48-90 (d) (6) of the City of Falls Church Zoning Ordinance.

Proffered Conditions Binding on Future Owners: The Owner agrees that these Voluntary Proffered Concessions will apply to and be binding upon all future owners, and upon all heirs, successors and assigns of any owner of any portion of the Subject Property, and the Owner further agrees that it will provide a copy of these Voluntary Proffered Conditions to any such future owner, heir, successor and assign prior to transferring any interest in any part of the Subject Property to any such person, firm, corporation, or other entity.

Administrative Staff Approvals: Site Plan approval is defined as approval of the Site Plan for the Subject Property by the Planning Commission. The Owner agrees to apply within 90 days of Site Plan approval for associated administrative staff approvals and

related bonds using good faith efforts to complete these approvals in a timely manner. There may be consideration of one extension of three months following the initial 90 days at the discretion of the Director of the Department of Development Services.

Access for Commissioner of Revenue: The Owner agrees that the City of Falls Church Commissioner of Revenue (CoR) and/or his designated staff upon prior written notice to an Owner designated representative will have access to the garage(s) on the Subject Property at all times for inspection of window stickers related to personal property taxes for vehicles. The CoR and staff will be provided all credentials necessary to have access to parking garage(s) by vehicle at all times. In the event the access credentials are changed or updated, the CoR will be provided notice and updated access credentials within 30 calendar days.

Terms and Conditions Incorporated in Resolution: The Owner voluntarily submits the foregoing concessions, terms, and conditions to the City Council to be incorporated by reference with the Resolution for the Special Exception, should City Council grant the applications for Special Exception with the conditions set forth in this submission.

SPECTRUM DEVELOPMENT, LLC

By:_____ ,its authorized representative
Name: Richard P. Buskell
Title: Manager/Member

Date June 15, 2018

WALTER L. PHILLIPS INCORPORATED
ESTABLISHED 1945
Engineers • Surveyors • Planners
Landscape Architects • Arborists
207 PARK AVENUE
FALLS CHURCH, VIRGINIA 22046
(703) 532-6163 Fax (703) 533-1301
www.WLPINC.com

COMMONWEALTH OF VIRGINIA
KAREN L. S. WHITE
Lic. No.041850
8/14/18
PROFESSIONAL ENGINEER

NO.	DESCRIPTION	DATE
	GMP SET	6/21/18

DATE: SUB/1 1/23/2015, SUB/2 2/26/2016, GMP 6/21/2018, SUB/3 7/10/2018
GMP ADDENDUM/01 7/27/2018, SUB/4 8/14/18
SCALE: NONE
DRAWN: AL KW, DM, BP, JT
CHECKED: KW

VOLUNTARY CONCESSIONS
FOUNDERS ROW
AT THE INTER SECTION OF WEST BROAD STREET, NORTH WEST STREET & PARK AVENUE
CITY OF FALLS CHURCH, VIRGINIA

SHEET: C-0205

CERTIFICATION

I, Celeste Heath, City Clerk for the City of Falls Church, Virginia do hereby certify that the foregoing is a true and correct copy of "VOLUNTARY CONCESSIONS, COMMUNITY BENEFITS, TERMS AND CONDITIONS Spectrum Development LLC/Mason Row, REVISED JANUARY 11, 2016," and is incorporated into Resolution 2016-04, which was duly adopted by the City Council of the City of Falls Church at a meeting held on January 11, 2016.

The foregoing consists of 20 pages and is signed by Richard P. Buskell, Manager/Member, Spectrum Development, LLC.

IN WITNESS WHEREOF, I hereunto set my hand and affix the seal of the City of Falls Church, Virginia this 12th day of January 2016.

Celeste Heath
Celeste Heath
City Clerk

ATTACHMENT-VOLUNTARY CONCESSIONS

MASON ROW

Retail Project Plan

December 31, 2015

This Retail Project Plan is the product of a collaborative effort between Spectrum Development and its retail consultant and leasing agent Streetsense. Streetsense is a nationally recognized retail strategic planning and leasing firm that is headquartered in Bethesda, MD.

MASON ROW - MARKET ASSESSMENT

The area comprised of McLean, North Arlington and Falls Church is strong, with a healthy local economy and vibrant local neighborhoods; the area boasts some of the strongest demographics in Northern Virginia. The area's residents, however, are underserved in most retail categories, especially when compared to comparable areas in the Washington region. Leesburg Pike, one of the area's primary commercial corridors and transportation arterials, is the logical focal point and place of congregation for the surrounding communities, but instead this commercial corridor suffers from poor planning and is lacking a sense of place, that is so essential to the vitality and quality of life of any healthy urban or semi-urban community. The Falls Church/McLean/North Arlington sub-market is dominated by generic shopping malls, power centers and service-oriented strip centers and it is devoid of any commercial destinations with a strong sense of place.

Mason Row Project Design

The project's merchandising plan will evolve around the project's unique spaces and features, while responding to external influences and neighboring blocks and uses. It is important to encourage connectivity with surrounding neighborhoods, their residents, businesses and visitors and to provide the surrounding area with something that is commercially, recreationally and socially unparalleled in the marketplace. Mason Row will be among the prime visual, social and commercial anchors in the area and will feel more like an urban, open, public space than an enclosed "mall" or suburban shopping center.

The Falls Church market area is currently noted for sprawling, suburban-oriented communities and commercial centers, limited great "places," exist. The proposed project's plan and architecture will complement the neighborhood and make an invaluable contribution to the character of Broad Street, West Street and the surrounding communities. The great potential this project holds is its ability to anchor and reinforce the area's renaissance. It will encourage a myriad of tangible and intangible economic and social spin-offs to surrounding commercial areas and neighborhoods.

Parking

The availability of convenient public parking in Falls Church is limited. Many well-located mixed use projects and retail businesses in the area are struggling because parking is in short supply or because accessing it and walking from parking to shopping or dining is inconvenient and/or undesirable. For this reason, Mason Row is paying a tremendous amount of attention to parking availability, accessibility and circulation.

The current parking plan at Mason Row is strong, boasting an abundance of dedicated retail spaces (greater than 4.5 spaces per 1,000 sf of retail space), plus shared parking during non-peak hours. In an effort to maximize convenience, retail parking has been centrally located in close proximity to Mason Avenue and has been separated from residential, and office parking, which will maximize convenience and overall experience for retail customers. Parking circulation has been carefully thought through, with multiple points of ingress/egress for vehicles; the same goes for drivers once they've parked, as there will be multiple paths of travel for the pedestrian, to maximize convenience. Overall, strong attention has been paid to making the pedestrian experience (from car to street) a, quick, convenient, safe and comfortable experience, with high floor-to-floor garage ceilings and well-lit, wide sidewalks. Street parking on Mason Avenue has been maximized where possible; such teaser parking will strengthen the pedestrian environment and will enhance perceptions of the parking amenity. Mason Row will compete effectively with neighboring strip centers, Tysons Corner and Mosaic, because of the convenience, abundance and safety of its parking.

Mason Avenue and Market Square – an urban market street and plaza

While Broad Street and (to a lesser extent) West Street will represent the building's first impression in terms of approach, the market street and market square design, paired with the tenants surrounding it, will be the prime focal point of the project and will be its most distinguishing feature. Mason Avenue and the execution of its design is of paramount importance to the success of Mason Row. Unlike most new development in Falls Church, Mason Avenue adds a one-of-a-kind landmark space to the interior of the site that a single street-oriented infill building cannot. Such a space brings with it an identity-creating element that, while located within the project's interior, will give Mason Row its "face." The retail Avenue brings with it the opportunity to create a hierarchy of public spaces with outdoor seating areas—not to mention enhanced circulation—within the site and to the surrounding area. With careful design and thorough attention to detail when it comes to material selection, the space has the potential to be an authentically urban public space that puts Mason Row on the regional map.

Additionally, Mason Avenue is an opportunity to increase retail frontage, leasable area and the number of destinations within the project; all enhancements that separate the project from other infill projects that have been developed in the area in recent years.

RETAIL MERCHANDISING AND LEASING

The Mason Row retail project is an entertainment and food destination at its core. The project is designed to be a pedestrian oriented urban retail market place that is open air and which has significant public gathering space and an abundance of convenient commercial parking on site. The aim of this project's retail merchandising plan is not to compete with existing suburban retail strip offerings or the Tyson's Corner malls, but rather, to provide the surrounding region with merchandising categories and a level of character not currently available, while also encouraging a high level of connectivity with surrounding neighbourhoods and existing businesses in the area.

Based on research of the current competitive landscape for retail and the assessment of the market by Streetsense, Mason Row is being merchandised to create an entertaining shopping environment, which has a high quality, urban movie theater, a well-curated mix of high quality restaurants—full-service and limited-service--and neighborhood serving retail shops, coupled with high, public space-oriented design. Additionally, the location on the bike trail sets the stage for a unique and interactive retail environment in Falls Church.

Cinema

Movie theater and retail shopping audiences are seeking the same goal when visiting a retail destination such as Mason Row, which is entertainment and socialization. Movies help draw visitors to a retail project and the shopping and dining that a well-designed retail atmosphere creates is substantially beneficial to a movie theater, who wants its guests to have complementary reasons to visit the theater. The movie theater business has reinvented itself over the past few years. Theaters are focusing on smaller, more intimate venues with fewer seats. Many theaters are making a luxury experience their prime focus, while others are looking to food and beverage offerings to entice viewers. Some theaters are concentrating on both, offering separate restaurants and a higher end food and service experience.

Mason Row is ideally suited for a high quality movie theater because of its superior, high quality place making and because of its abundance of quality restaurants and convenient commercial parking. The movie theater in Mason Row will be a smaller urban design theater with no more than 8 screens (limited to 800 seats) and a cocktail lounge and or restaurant and will complement the public space and other restaurants in the project. The Mason Row Theater concept will have 1st Run movies from the Hollywood Studios as well as some smaller budget films and will host special themed film events and community and charity events with special film showings, which showings would be related to a specific community or charity event.

Full-Service Dining

Falls Church is underserved in the full-service dining category. Full-service restaurants currently in the immediate vicinity of the Mason Row site are predominately lower quality national chains and locals. Many of the area's full-service restaurants suffer from parking deficiencies and rely too heavily upon pedestrian traffic, in a market in which the automobile is the preferred mode of travel. As a result, most of the area's residents travel to Mosaic, Tysons Corner, Clarendon or even downtown Washington for destination dining. Through high quality place making, having a well-recognized theater in the project and abundant, convenient parking, Mason Row is ideally suited for high quality restaurants that are geared toward discerning, higher demographic families that reside in the Falls Church market area. Mason Row will target approximately 20% of the total ground floor retail space for Full-Service dining.

Limited-Service Dining

Limited service food and beverage uses (also referred to as "fast casual") can add a layer of amenity for the consumer who doesn't want to eat in a full service environment every day or night. A more casual, less costly commitment will increase the customer base, the number of trips per customer and the subsequent number of day parts during which the Mason Row project is active. Limited-service dining—particularly during lunch—is primarily for people who have a limited amount of time and therefore Mason Row will have an advantage in serving this category, over many other mixed use projects and strip retail centers in the area, because of Mason Row's superior place making and due to the large amount of convenient retail parking that Mason Row provides for short term retail visitors. Mason Row will target approximately 30% of the total ground floor retail space for Limited-Service dining.

Additional focus is being placed on high quality brands; particularly trendy Washington area restaurants, which might have a broader reach than some chains who are already over exposed in the marketplace and therefore who would draw from a smaller trade area. Mason Row has made a specific commitment in the Voluntary Concessions to the City, to provide outdoor patio seating space for the Food & Beverage retail tenants and that there will be no less than 20,000 square feet of commercial space offered to and exclusively retained for initial leasing to Food and Beverage retailers.

Neighborhood Services Retail and Other Conditional Retail Uses

Falls Church is already populated with basic service retail; however, a finely-tuned mix of neighborhood-oriented uses and a tenant mix that rises above the current offering will generate foot traffic throughout the day, week and year and will do so in a way that is complimentary of other high quality uses and is consistent with a high quality retail environment. The Mason Row project has committed to limiting the amount of retail space for this category to no more than 15% of the total ground floor retail space in the project. This commitment is documented in the Voluntary Concessions terms and conditions made by Spectrum Development and the Mason Row project.

Specialty Retail

This retail category will include important retail offerings that contribute to the overall sense of place for the Mason Row project. These retailers offer a limited variety of specialty products that are not readily available in most neighborhood shopping centers. This retail category will cover the product segments, other than the Retail Services/Conditional Retail Uses category, from the group of retail categories listed at the end of this document in the section marked Retail Categories for the Leasing Program. These Specialty stores are most often built out and configured using special lighting packages and building materials and paint schemes to promote a theme or brand of product. The Mason Row project will target approximately 35% of the total ground floor retail space for the Specialty Retail category.

MARKET SQUARE - PROGRAMMING THE PUBLIC SPACES AT MASON ROW

The retail component and market square at Mason Row will drive the character of the project and will establish its relationship with the community and surrounding region. High quality public gathering space, architecture and planning, strong accessibility, market-appropriate merchandising and high quality tenancy will dictate the retail's success. The sum of all its parts will be the main attraction; the degree of which can be greatly enhanced by supplemental, complimentary programing of its public areas. A site as prominent and centrally-located as Mason Row possesses exceptional potential for events that are highly visible and far reaching. Falls Church presently lacks a commercial place with which the residents of the community collectively identify for social gathering. As a result, there is a tremendous amount of potential for events that support and promote Mason Row and strengthen its relationship with the immediately adjacent and surrounding communities. Conveniently, Mason Row will possess the public spaces to accommodate such events and these spaces are designed in a way that will maximize their influence on the public and their general degree of success.

Such events are the ultimate "destination use," bringing to the project people who might otherwise be difficult to attract. One-off events and regularly scheduled events that people can come to expect on specific dates (daily, weekly, monthly or annually) are effective in luring customers who might not otherwise be drawn to the project; they are also tremendously effective in drawing infrequent visitors to the project on an increased basis. Frequency of attendance promotes customer loyalty and is more likely to induce changes in existing shopping and socializing patterns within the project's trade areas; it is also a way of separating the project from other area retail shopping competitors.

Programmed Event Examples

Showtime for Kids
Interactive outdoor plays where kids are invited to participate with local stage troupes in key roles, adding to and changing the storyline.

Seasonal Concert Series
Weekly concert events, featuring local talent.

Weekly Farmers Market
A featuring of local farmers, food and craft merchants, spilling out onto streets and sidewalks.

Fall Season Farmers Market and Extravaganza
Vendors from around the region congregate to showcase Fall-related goods and specialties, featuring pumpkin carving lessons, a costume parade and live performances.

Annual Cook-off
Competition featuring popular local chefs and restaurateurs.

Annual Film Festival and/or Regular Outdoor Screenings
Sponsored by local companies and institutions, partnered with project cinema tenant.

Theatre in the Round
Theatrical performances by various local troupes.

Art Walk
Exhibits and demonstrations by local artists and art institutions.

"Mason Row will be a unique, local landmark. Paired with an anchor cinema use, strong emphasis on unique restaurant concepts and public events that work in concert with the project's design and its surroundings, will make this project highly identifiable". (Streetsense)

Retail Categories for the MASON ROW Leasing Program

FOOD

(1) Fast Casual Restaurants with or without Patio Seating – Pizza/Sandwiches/Burgers/Sushi/Pasta, etc.
(2) Full Service Dining with or without Patio Seating
(3) Food Markets – Gourmet Butcher/Fresh Seafood Market/Cheese Shop/fresh vegetables & fruits
(4) Coffee Shop
(5) Ice Cream and Yogurt
(6) Chocolate Shop
(7) Wine Shop
(8) Tavern/Bar Restaurant
(9) Specialty Tea Store
(10) Candy store
(11) Baked goods store
(12) Food Catering

BOUTIQUES – SMALL RETAIL SHOPS

(1) Personal Beauty Products
(2) Candle & Soap Shop
(3) Fashionable Clothing
(4) Lifestyle Clothes - Vacation Wear
(5) Jewelry
(6) Home Accessories & Gifts
(7) Children's Apparel – Baby Accessories for the home & travel
(8) Kitchen Accessories & Cookware

WALTER L. PHILLIPS INCORPORATED ESTABLISHED 1945
Engineers • Surveyors • Planners
Landscape Architects • Arborists
207 PARK AVENUE
FALLS CHURCH, VIRGINIA 22046
(703) 532-6163 Fax (703) 533-1301
www.WLPINC.com
COMMONWEALTH OF VIRGINIA BUSINESS PROFESSIONAL ENGINEER
KAREN L. S. WHITE
Lic. No.041850
8/14/18

SCALE: NONE
DATE: SUB01 1/23/2015, SUB02 2/20/2015, GMP 8/21/2018, SUB03 7/10/2018
DRAWN: AL KW, DM, BP, JT
CHECKED: KW
GMP ADDENDUM01 7/27/2018, SUB04 8/14/18

NO.	DESCRIPTION	DATE
	GMP SET	6/21/18

VOLUNTARY CONCESSIONS

FOUNDERS ROW

AT THE INTER SECTION OF WEST BROAD STREET, NORTH WEST STREET & PARK AVENUE
CITY OF FALLS CHURCH, VIRGINIA

SHEET: C-0206

(9) Premier Paperie – Card Shop

(10) Artisan Olive Oil & Vinegar

(11) Art Gallery/Art Studios/Art Framing

(12) Flower Shop

(13) Toy store

(14) Music store

(15) Shoe store

(16) Leather Goods

(17) Book store

SPORTS

(1) Bike Shop with Bike Service/Repair

(2) Running Store

(3) Athletic Wear Store

(4) Sporting Goods

(5) Ski shop

(6) Boating store

HOME FURNISHINGS/ACCESSORIES/GIFTS

(1) Home Furnishing & Interior Design

(2) Lamp/Lighting shop

(3) Carpet store

(4) Windows/Window Treatments

ELECTRONICS

(1) Computer Store

(2) Wireless Telephone

(3) Electronics store

(4) Computerized Games

WELLNESS (Mainstream)

(1) Fitness Center

(2) Health Supplements

(3) Pharmacy

FINANCIAL SERVICES (Mainstream)

(1) Bank Retail Branch Office – with no drive thru

THEATER

(1) Movie Cinema or Cinema Draft house/Dine-In Theaters

(2) Live Stage Theater/Performing Arts

GROCERIES

(1) Grocery store

(2) Convenience store

NEIGHBORHOOD SERVICES RETAIL and OTHER CONDITIONAL RETAIL USES (*This Retail Category is Limited to 15% of Total Ground Floor Retail in the Mason Row Project – Addressed in the VCs*)

(1) Packaging and Shipping store

(2) Copy shop

(3) Cleaners

(4) Office Supplies

(5) Child Learning Center

(6) Child Fitness Center

(7) Hardware store

(8) Shoe repair

(9) Travel Services

(10) Yoga & Pilates Studio

(11) Spa Treatments and Acupuncture

(12) Dentist/Doctor's Office, Urgent Care

(13) Private Wealth Management Office

(14) Insurance Office

(15) Accounting and Tax services

(16) Small Pet Shop/Dog Training

(17) Hair Styling

(18) Antiques

(19) ABC Liquor store

EXHIBITS FOR VOLUNTARY CONCESSIONS
PROVIDED BY APPLICANT
JANUARY 7, 2016

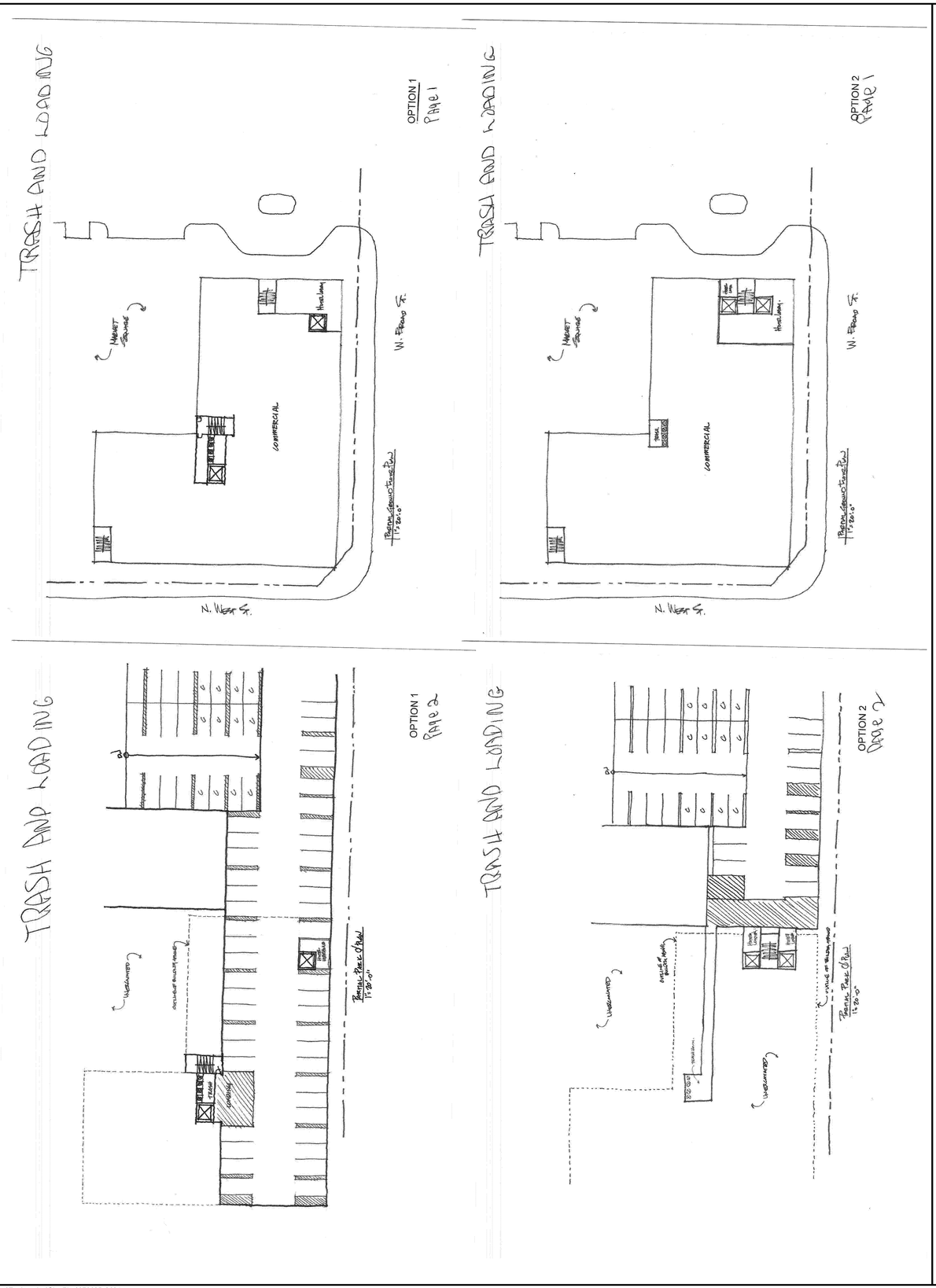

VOLUNTARY CONCESSIONS

FOUNDERS ROW

AT THE INTER SECTION OF WEST BROAD STREET, NORTH WEST STREET & PARK AVENUE
CITY OF FALLS CHURCH, VIRGINIA

NO.	DESCRIPTION	DATE
	GMP SET	6/21/18

WALTER L. PHILLIPS INCORPORATED ESTABLISHED 1945
Engineers • Surveyors • Planners
Landscape Architects • Arborists
207 PARK AVENUE
FALLS CHURCH, VIRGINIA 22046
(703) 532-6163 Fax (703) 533-1301
www.WLPINC.com
COMMONWEALTH OF VIRGINIA
KAREN L. S. WHITE
Lic. No.041850
8/14/18
PROFESSIONAL ENGINEER

SCALE: NONE
DATE-SUBD1 9/23/2015, SUB02 2/26/2016, GMP 8/21/2018, SUB03 7/10/2018
GMP ADDENDUM01 7/27/2018, SUB04 8/14/18
DRAWN: AL KW, DM, BP, JT
CHECKED: KW

VOLUNTARY CONCESSIONS NARRATIVE

Voluntary Concession #	Description	Associated Plan #, Plat #, or Deed Book and Page and Method of Compliance	Comments
1 Conceptual Development Plan	Development must be in conformance with approved CDP, SE application and TMP. Max 322 residential units (23 of which are affordable) and 372,245 sf of residental gross square footage.	See Sheet C-0201.	
2 Uses	Hotel, multifamily, movie theater, office on second level, commercial use on ground floor	See Sheet C-0201.	
3 Commercial Space	Break down of uses permitted/required.	To be finalized during retail tenant fit out/building permit process	
4 School Capital Contribution	$5.24/sf of market rate gross apartment unit area		Contribution will be paid prior to issuance of 1st residential certificate of occupancy.
5 Affordable Housing	23 Affordable units will be provided.		Restrictive Covenant to be recorded in the land records. The exact units to be determined during the building permit process.
6 Pedestrian-Oriented Design Elements and Aerial Utilities			
Streetscape	Dedicate an easement for Public Streetscape Easement. 10' sidewalk will be provided on W. Broad St and N. West Street however a 6' clear sidewalk can be located adjacent to outdoor dining.	See Preliminary Plat, Sheet C-0304. Geometric Plan, Sheet C-0402 and West Broad Streetscape Plan, Sheet C-0403.	The Public Streetscape Easement will be recorded prior to 1st Certificate of Occupancy. Streetscape Maintenance Agreement to be executed prior to issuance of first CO.
Market Square	Construct and maintain surface level plaza and public space	See Landscape Plans	
Bus Stop	Construct a bus stop shelter on West Broad Street	See sheet C-0401 for location and Landscape Plan Sheet L2.2 for details.	
Undergrounding of Utilities	Underground 3 utility pole off site along the north side of N. West Street between Grove Avenue and the WO&D trail crossing on N West Street. Install 2.5" caliper trees at 30' spacing adjacent to sidewalks on the north side of West Street.	See Dry Utility Plan, sheet C-1401 and Landscape Plan, sheet L3.0.	
Pedestrian Improvements, Connection and Ways	Construct crosswalks a N. West and Park Ave intersection, install pedestrian crosswalk including median island for rufuge across N. West Street at Grove Ave intersection, instillation of new cross walks on 2 lets of the 4-way N. West and W. Broad Intersection, instaillation of crosswalk across W. Broad at the eastern vehicualr access point of the property and construct improvements to the W&OD trail crossing on Grove Ave and N. West Street.	See Sheets C-0403 - C-0405	
7 Environmental Improvements			
Green Building Criteria: National Green Building Standard (NGBS)	NGBS Silver certification for multi-family portion required. See additional detail in VC language.	See architectural buildling permit plans for details	NGBS certification application to be submitted within 6 months of obtaining the final CO for residential tenant occupancy.
Future Solar Panels		See archtiectural building permit plans for rooftop mechanical systems.	
Electric Vehicle Charging Station	Minimum (5) charging station to be provided in project parking garage.	See architectural garage plans for locations.	Locations of charging stations determined at Site Plan Approval.
Storm Drainage and Runoff	Reduce phosphorus runoff by 20%, plus any additional impervious area to have a maximum release of 0.41 lbs/ac/yr. Reduce overall runoff from the site to meet the channel and flood protection requirements by the State.	See sheets C-0701-C-0704 for details.	
Removal of Contaminated Soil	See specific language in VC document.	Implemented during construction.	Contractor/owner to provide documentation of compliance prior to issuance of any permit for above-grade construction.
8 Installation of Vegetation	Meet minimum tree/shrub sizes as outlined in VC language	See sheet L3.0 for plantings.	Landscape as-built required for CO.
9 Lighting	See specific language in VC document.	See sheet E1 in site plan for Photometric Plan.	
10 Stormwater & Sanitary Sewer Capacity Expansion	Sanitary capacity analysis required; relining of storm structures as noted in VC language.	See sheet C-0801 for storm sewer profile and sheet C-0902 for sanitary sewer capacity study.	City to review and determine sanitary upgrades required.
11 Transportation Improvements			
Traffic Signals	The traffic signal is proposed with this site plan.	The traffic pole equipment is shown on sheet C-0403 of the site plan.	The traffic pole will be fully designed and approved under a separate permit.
Street Capacity and Safety Improvements	Improvements to Mason Avenue, N. West and Park Avenue intersection, realignment of W&OD trail crossings at Grove and N. West Street, addition of turn lanes, add speed tables to calm traffic on Grove Anue, Owner to mill and repave West Broad, N. West Street, and Park Avenue as noted in VC language. Replace and reconstruct damaged sidewalk sections from construction.	See sheets C-0401 - C-0401, C-0502 & C-0503.	Paving work to be completed prior to issuance of any CO for any of the last twenty residential units.
12 Parking Garage	Parking garage walls visible from single family home shall be at least 42 inches high to block headlights; agreement with St. James Catholic Church to provide 50 spaces withint garage on Sunday - details in VC language.	See architectural/structural plans for garage wall detail. Agreement to be developed.	
13 Transportation Demand Management (TDM) and Parking Management Plan	The developer agrees to employ strategies developed with the TDM program and Parking Management Plan. See specific detail in VC language.	See PMP submitted with site plan.	
14 On-Street Parking Restrictions	Parking for employees to be provided onsite.	See sheet C-0201 for parking tabulations, and PMP for parking management.	
15 Shuttle Service	Hotel Operator to provide a shuttle from Easter/West Falls Church Metro for employees and guests.		Shuttle service shall begin operation within 60 days after the hotel opens for business.
16 Bike Parking, Storage and Bike Share			
Bike Parking and Storage	Class 3 visitor bike racks and Class 1 bike storage consistent with Arlington County bicycle parking standards and reuirements.	See sheet C-0201 for bike parking tabulation, sheet C-0401 for streetscape bike parking locations, architectural garage plans for additional bike spaces.	
Bike Share	Grant an easement for City installation and operation of a bike share facility. Owner agrees to reimburse City for operation and maintenance of BikeShare facility. See additional detail in VC language.	See sheet C-0401 for potential bike share location on Park Avenue.	

Voluntary Concession #	Description	Associated Plan #, Plat #, or Deed Book and Page and Method of Compliance	Comments
17 Post-Development Traffic Study and Improvements	Onwer to pay the cost of post-development traffic study and improvements up to $50,000.	Study to be conducted (12) months after completion of the project.	
18 Parks and Recreation Contribution	$500 per residential unit (excluding ADUs)	Met with contribution	To be paid prior to issuance of first residential CO.
19 Public Art and Art Space	$25,000 contribution to CATCH Foundation; provide art as shown on Option A for treatment of East Façade.	Met with contribution	To be paid prior to issuance of first residential CO.
20 Falls Church Public Library Contribution	$0.62 per sf of gross residential apartment unit area (excluding affordable dwelling units).	Met with contribution	To be paid prior to issuance of first residential CO.
21 Construction Management			
Construction Parking and Staging Plan	Prepare demolition and staging plan for project, construction parking plan, and construction traffic and staging plan, including providing sufficient parking for workers.	After selection of contractor, preparation of a Construction Parking Plan and a Construction Traffic and Staging Plan - to be implemented during construction.	To be approved by City Manager prior to issuance of any demolition and/or building permits.
Community Liaison	See detail in VC language.	To be provided in writing to City Manager.	Prior to commencement of any work on the site.
Excavation Monitoring	See detail in VC language.	To be provided during construction.	
Sidewalk Accessibility	See detail in VC language.	To be implemented during construction.	
Pest Control	See detail in VC language.	To be implemented prior to and during construction.	
22 Public Safety			
Public Safety Radio	See detail in VC language.	See building permit plans.	
Life Safety	See detail in VC language.	See building permit plans.	
Driveway/Ramp Load Capacity	See detail in VC language.	See building permit plans.	
Theater Life Safety Plan	See detail in VC language.	See building permit plans.	
23 Easements	Public access easements as shown on CDP.	See preliminary Plat, Sheet C-0304.	
24 Other Terms and Conditions			
Owner Acknowledgements	Special Exception expires 36 months after date of approval & is non-transferrable.	N/A	
Proffered Conditions Binding on Future Owners		N/A	
Administrative Staff Approvals	Owner to submit for Site Plan and bond approval after Planning Commission approval within 90 days.	N/A	
Access for Commissioner of Revenue	See detail in VC language.	N/A	
Term and Conditions Incorporated in Resolution	See detial in VC Language	N/A	

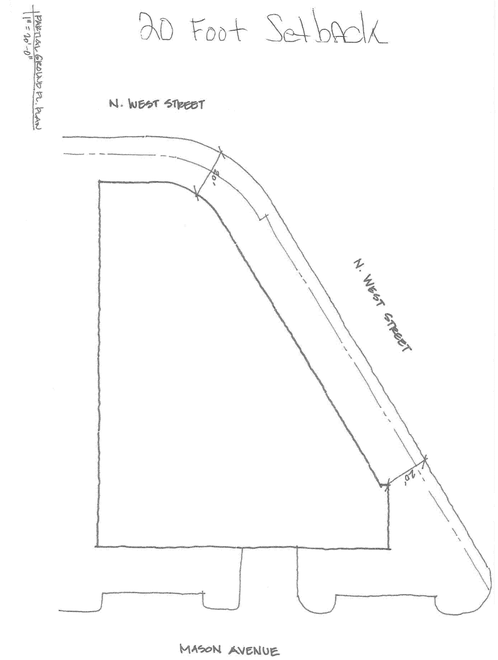

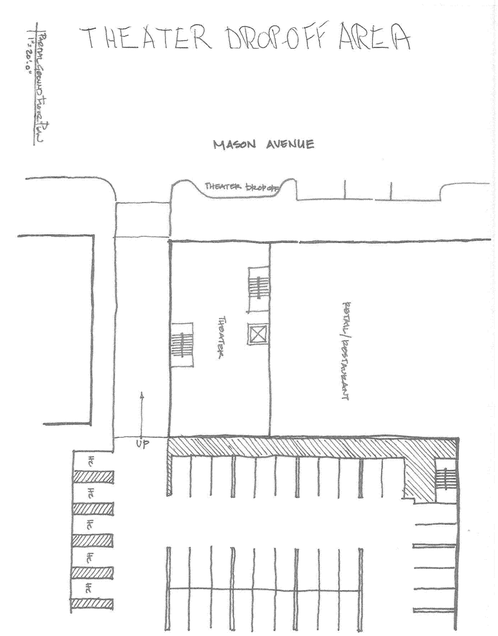

WALTER L. PHILLIPS INCORPORATED ESTABLISHED 1945
Engineers • Surveyors • Planners
Landscape Architects • Arborists
207 PARK AVENUE
FALLS CHURCH, VIRGINIA 22046
(703) 532-6163 Fax (703) 533-1301
www.WLPINC.com

COMMONWEALTH OF VIRGINIA BUSINESS PROFESSIONAL ENGINEER
KAREN L. S. WHITE
Lic. No.041850
8/14/18

DATE: SUB01 1/23/2015, SUB02 2/20/2014, GMP 8/21/2018, SUB03 7/10/2018
GMP ADDENDUM01 7/27/2018, SUB04 8/14/18
SCALE: NONE
DRAWN: AL KW, DM, BP, JT
CHECKED: KW

NO.	DESCRIPTION	DATE
	GMP SET	8/21/18

VOLUNTARY CONCESSIONS

FOUNDERS ROW

AT THE INTER SECTION OF WEST BROAD STREET, NORTH WEST STREET & PARK AVENUE
CITY OF FALLS CHURCH, VIRGINIA

SHEET: C-0208

AVERAGE GRADE		
	EX.	PROP.
1	337.80	337.10
2	328.72	329.10
3	325.10	326.00
4	338.91	338.30
5	341.26	341.50
TOTAL	334.36	334.40

LOWEST AVE. GRADE = 334.36'

MAX. HT= 334.36 + 55 = 389.36
PROP. HT= 341.5' + 74.67' = 418'
418' - 334.36' = 83.64' BLDG. HT.
SPECIAL EXCEPTION REQUESTED FOR 85' BLDG HT

File No. CC-8 Tax Map No. 40-4 Job No. 07-023 Cadd Dwg. File: Q:\sdskproj\07023\dwg\Planning\Special Exception\07023P-0401.dwg Xref: DIR\Q:\sdskproj\07023\dwg\Planning\Special Exception\07023B-0000

SHEET: P-0401

WALTER L. PHILLIPS
INCORPORATED
ESTABLISHED 1945
Engineers • Surveyors • Planners
Landscape Architects • Arborists
207 PARK AVENUE
FALLS CHURCH, VIRGINIA 22046
(703) 532-6163 Fax (703) 533-1301
www.WLPINC.com

	DATE	CHECKED:
SCALE: 1"=30'	DATE:01/09/2014, REV. 07/07/2014, REV. 08/28/2014, 12/15/2014, 01/28/2015 SUB.02, 4/8/2015 SUB.04, 7/24/2015 SUB.06, 11/12/2015 SUBD1, 12/09/2015 SUBD2, 4/25/2017 REV01, 6/29/2018 REV1	KW
	DRAWN: AA, BS	CHECKED: KW

CONCEPTUAL DEVELOPMENT PLAN

FOUNDERS ROW

CITY OF FALLS CHURCH, VIRGINIA

NO.	DESCRIPTION	DATE	REV. BY	APPROVED	DATE

REVISION APPROVED BY

WALTER L. PHILLIPS
INCORPORATED
ESTABLISHED 1945
Engineers • Surveyors • Planners
Landscape Architects • Arborists
207 PARK AVENUE
FALLS CHURCH, VIRGINIA 22046
(703) 532-6163 Fax (703) 533-1301
www.WLPINC.com

	DATE	CHECKED:
SCALE: NONE	DATE:SUB01 10/23/2015, SUB02 2/22/2016, GMP 8/21/2018, SUB03 7/10/2018	KW
	DRAWN: AL KW, DM, BP, JT	CHECKED: KW

APPROVED SPECIAL EXCEPTION CONCEPTUAL DEVELOPMENT PLAN

FOUNDERS ROW

AT THE INTER SECTION OF WEST BROAD STREET, NORTH WEST STREET & PARK AVENUE
CITY OF FALLS CHURCH, VIRGINIA

NO.	DESCRIPTION	DATE
	GMP SET	6/21/18

File No. CC-8 Tax Map No. 40-4 Job No. 07-023 Cadd Dwg. File: Q:\sdskproj\07023\dwg\Engineering\Site Plan\07023C-0209.dwg Xref: DIR\Q:\sdskproj\07023\dwg\Engineering\Site Plan\07023B-0001

SHEET: C-0209

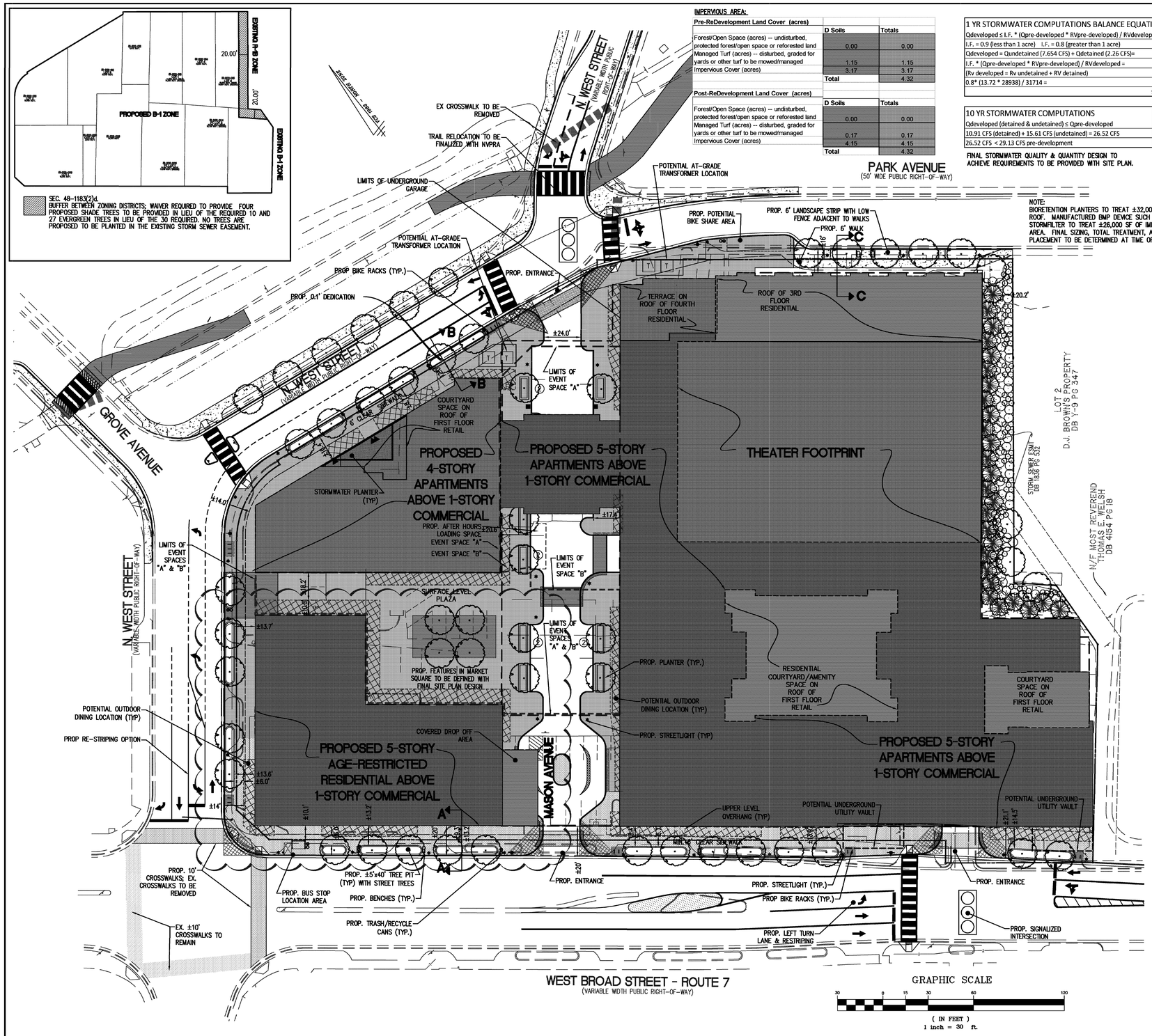

IMPERVIOUS AREA:

Pre-ReDevelopment Land Cover (acres)	D Soils	Totals
Forest/Open Space (acres) -- undisturbed, protected forest/open space or reforested land	0.00	0.00
Managed Turf (acres) -- disturbed, graded for yards or other turf to be mowed/managed	1.15	1.15
Impervious Cover (acres)	3.17	3.17
Total		4.32

Post-ReDevelopment Land Cover (acres)	D Soils	Totals
Forest/Open Space (acres) -- undisturbed, protected forest/open space or reforested land	0.00	0.00
Managed Turf (acres) -- disturbed, graded for yards or other turf to be mowed/managed	0.17	0.17
Impervious Cover (acres)	4.15	4.15
Total		4.32

1 YR STORMWATER COMPUTATIONS BALANCE EQUATION

Qdeveloped ≤ I.F. * (Qpre-developed * RVpre-developed) / RVdeveloped

I.F. = 0.9 (less than 1 acre) I.F. = 0.8 (greater than 1 acre)

Qdeveloped = Qundetained (7.654 CFS) + Qdetained (2.26 CFS)= 9.914 CFS

I.F. * (Qpre-developed * RVpre-developed) / RVdeveloped =

(Rv developed = Rv undetained + RV detained)

0.8* (13.72 * 28938) / 31714 = 10.015 CFS

9.914 CFS < 10.015 CFS

10 YR STORMWATER COMPUTATIONS

Qdeveloped (detained & undetained) ≤ Qpre-developed

10.91 CFS (detained) + 15.61 CFS (undetained) = 26.52 CFS

26.52 CFS < 29.13 CFS pre-development

FINAL STORMWATER QUALITY & QUANTITY DESIGN TO ACHIEVE REQUIREMENTS TO BE PROVIDED WITH SITE PLAN.

NOTE:
BIORETENTION PLANTERS TO TREAT ±32,000 SF OF ROOF. MANUFACTURED BMP DEVICE SUCH AS STORMFILTER TO TREAT ±26,000 SF OF IMPERVIOUS AREA. FINAL SIZING, TOTAL TREATMENT, AND PLACEMENT TO BE DETERMINED AT TIME OF SITE PLAN.

LEGEND

PROPOSED	DESCRIPTION	EXISTING
EP	EDGE OF PAVEMENT	EP.
MH	MANHOLE	MH
WV	WATER VALVE	WV
WM	WATER METER	WM
GM	GAS METER	GM
TCB	TRAFFIC CONTROL BOX	TCB
LP	LIGHT POLE	LP
LP/S	LIGHT POLE WITH SIGNALS	LP/S
	CURB & GUTTER	
	SANITARY SEWER	S
SL	SANITARY LATERAL	SL
C.O.	CLEAN OUT	C.O.
	STORM SEWER	
	WATER MAIN	W
	FIRE HYDRANT	
c	PLUG	c
	OVERHEAD WIRES	
	UTILITY POLE	
UE	UNDERGROUND ELECTRIC	UE
T	TELEPHONE	T
G	GAS MAIN	G
E	ELECTRICAL	E
	TRANSFORMER	
	HANDICAP RAMP (CG-12)	
X X X	FENCE	X X X
	TRAFFIC FLOW	
	LIGHT	
	DOOR	
	TREES	
	LIMITS OF CLEARING AND GRADING	
	BIORETENTION PLANTER	
	POTENTIAL OUTDOOR DINING AREAS, AVERAGE 6'-8' WIDTH (MUST MAINTAIN 6' SIDEWALK CLEARANCE)	

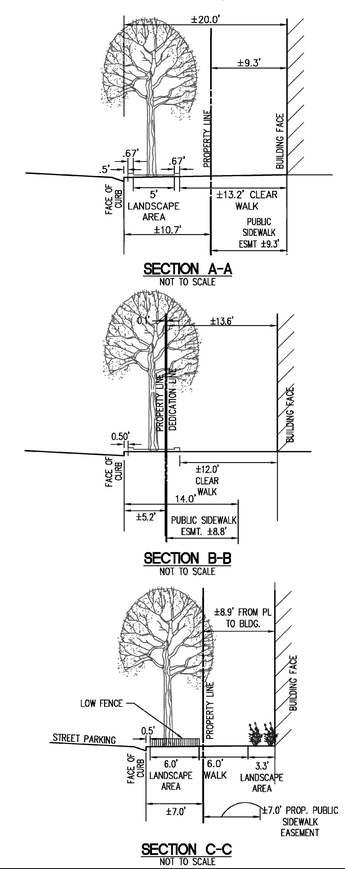

File No. CC-8 Tax Map No. 40-4 Job No. 07-023 Cadd Dwg. File: Q: \sdskproj\07023\dwg\Planning\Special Exception\07023P-0402.dwg Xref: DIR\Q:\sdskproj\07023\dwg\Planning\Special Exception\07023B-0000

SHEET: P-0402

WALTER L. PHILLIPS INCORPORATED
ESTABLISHED 1945
Engineers • Surveyors • Planners
Landscape Architects • Arborists
207 PARK AVENUE
FALLS CHURCH, VIRGINIA 22046
(703) 532-6163 Fax (703) 533-1301
www.WLPINC.com

SCALE: 1" = 30'

REVISION APPROVED BY

NO.	DESCRIPTION	DATE	REV BY	APPROVED	DATE

NO.	DESCRIPTION	DATE
	GMP SET	6/21/18

CONCEPTUAL STREETSCAPE PLAN

FOUNDERS ROW

CITY OF FALLS CHURCH, VIRGINIA

APPROVED SPECIAL EXCEPTION CONCEPTUAL DEVELOPMENT PLAN

FOUNDERS ROW

AT THE INTER SECTION OF WEST BROAD STREET, NORTH WEST STREET & PARK AVENUE
CITY OF FALLS CHURCH, VIRGINIA

WALTER L. PHILLIPS INCORPORATED
ESTABLISHED 1945
Engineers • Surveyors • Planners
Landscape Architects • Arborists
FALLS CHURCH, VIRGINIA 22046
(703) 532-6163 Fax (703) 533-1301
www.WLPINC.com

SCALE: NONE

DATE: SJB01 1/23/2015, SJB02 2/20/2014, GMP 8/21/2018, SJB03 7/10/2018

GMP ADDENDUM01 7/27/2018, SJB04 8/14/18

DRAWN: AL KW, DM, BP, TT

CHECKED: KW

File No. CC-8 Tax Map No. 40-4 Job No. 07-023 Cadd Dwg. File: Q: \sdskproj\07023\dwg\Engineering\Site Plan\07023C-0209.dwg Xref: DIR\Q:\sdskproj\07023\dwg\Engineering\Site Plan\07023B-0001

SHEET: C-0210

NOTES:

1. MANHOLE TO MEET CURRENT REQUIREMENTS OF A.S.T.M. SPEC. C-476
2. ALL REINFORCING STEEL TO MEET CURRENT REQUIREMENTS OF A.S.T.M. SPEC. A-615
3. CONCRETE TO BE CLASS A.
4. TAPEREED JOINT WITH O-RING GASKET TO MEET CURRENT REQUIREMENTS OF A.S.T.M. SPEC. C-361
5. PIONEER 301 MASTIC OR APPROVED EQUAL SHALL BE USED IN ADDITION TO THE JOINT SPECIFIED.
6. GROUT INVERTS SHALL CONSIST OF A PORTLAND CEMENT CONCRETE MIX TO VIRGINIA DEPARTMENT OF TRANSPORTATION SPECIFICATION FOR CLASS B-2 OR CONTAINING 1 PART CEMENT, 2 PARTS MORTAR SAND AND 3 1/2 PARTS AGGREGATE. THE SURFACE SHALL BE HAND TROWELED SMOOTH WITH NO COARSE AGGREGATE EXPOSED AND THE BENCHES ARE TO HAVE A LIGHT BROOM FINISH.
7. FLEXIBLE JOINT REQUIRED ON ALL PIPE CONNECTIONS TO MANHOLE. FLEXIBLE JOINT PIPE TO MANHOLE SLEEVE MAY BE KOR-N-SEAL, INTERSPACE, PRESSWEDGE OR APPROVED EQUAL. INSTALLATION SHALL BE IN ACCORDANCE WITH MANUFACTURER'S INSTRUCTIONS. REFER ALSO TO STD. DETAILS.
8. JOINT CONFIGURATION MAY BE CAST BELL-UP OR SPIGOT-UP.

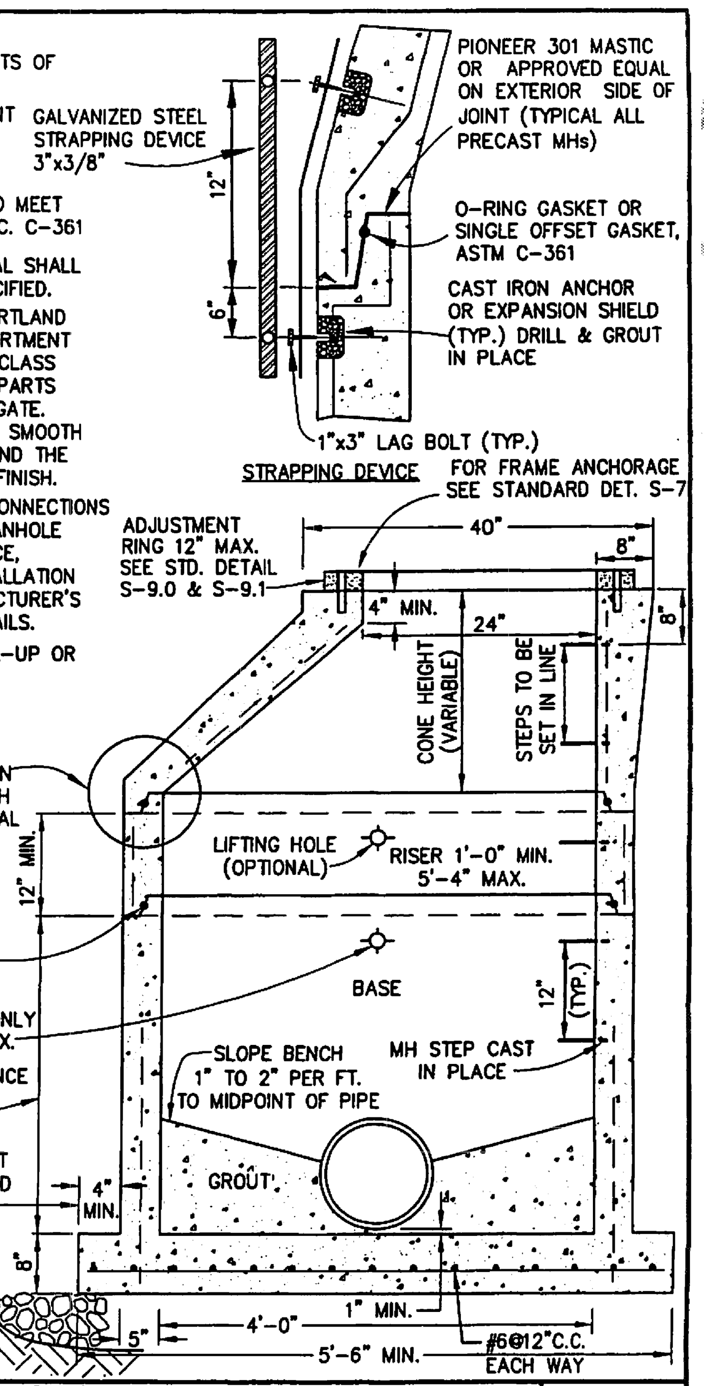

DATE:	STANDARD DETAIL TYPICAL 4'-0" I.D. PRECAST CONCRETE MANHOLE	DRAWING No.
REVISED: BY		S 1.0
APPROVED:	CITY OF FALLS CHURCH, VIRGINIA DEPARTMENT OF ENVIRONMENTAL SERVICES PUBLIC UTILITIES DIVISION	
PREPARED:		SCALE: NONE

S-3-10

ALL ACCESS COVER LIDS ON ALL MANHOLES WITHIN CITY RIGHT OF WAY OR EASEMENTS AND TO BE PUBLICLY MAINTAINED MUST BE PAM ACCESS OVER AS APPROVED BY ENGINEERING STAFF.

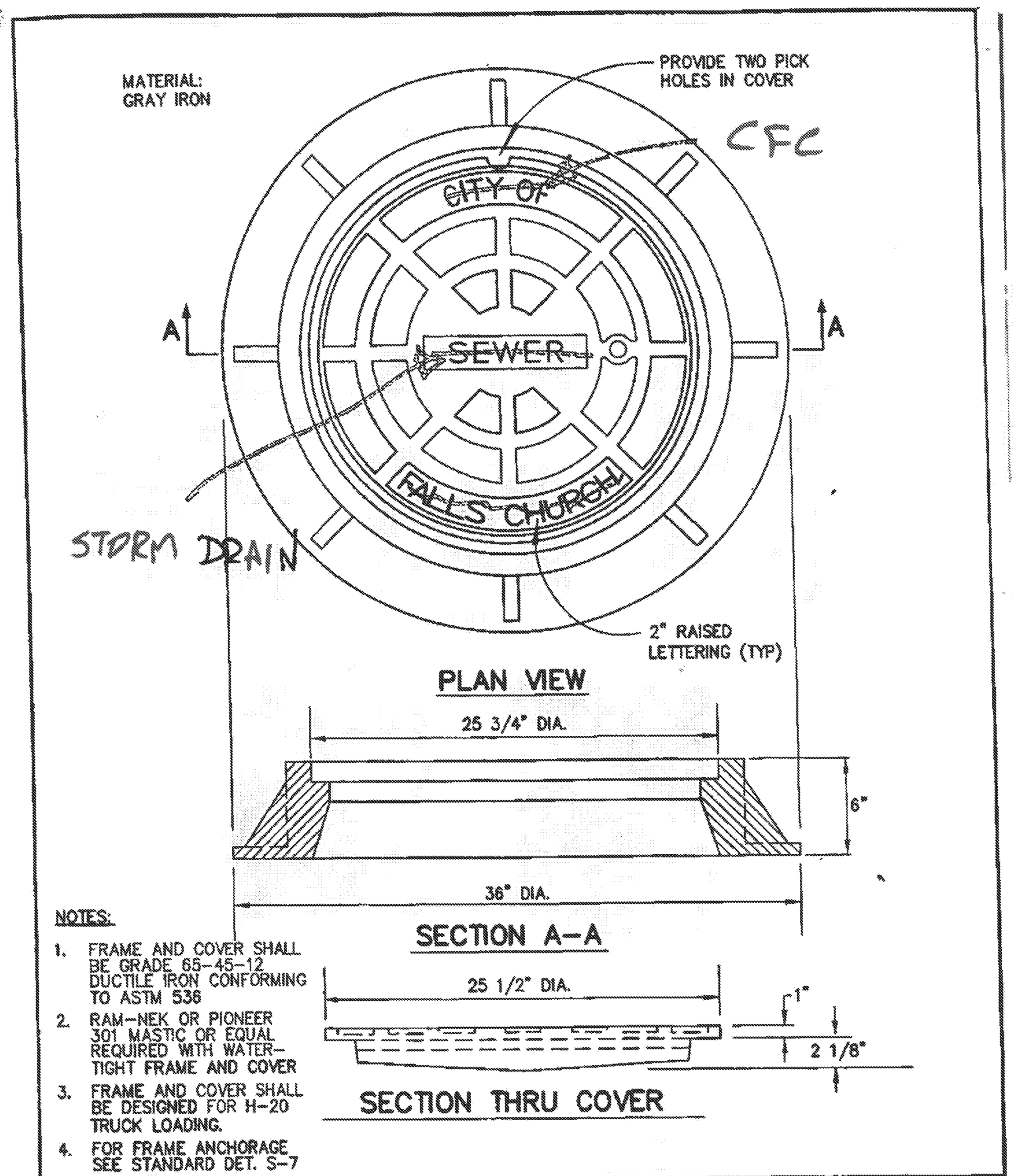

NOTES:

1. FRAME AND COVER SHALL BE GRADE 65-45-12 DUCTILE IRON CONFORMING TO ASTM 536
2. RAM-NEK OR PIONEER 301 MASTIC OR EQUAL REQUIRED WITH WATER-TIGHT FRAME AND COVER
3. FRAME AND COVER SHALL BE DESIGNED FOR H-20 TRUCK LOADING.
4. FOR FRAME ANCHORAGE SEE STANDARD DET. S-7

DATE:	STANDARD DETAIL STANDARD MANHOLE FRAME & COVER	DRAWING No.
REVISED: BY		S 10.0
APPROVED:	CITY OF FALLS CHURCH, VIRGINIA DEPARTMENT OF ENVIRONMENTAL SERVICES PUBLIC UTILITIES DIVISION	
PREPARED:		SCALE: NONE

NOTE :

1. CONCRETE TO BE CLASS A.
2. ALL REINFORCING TO MEET REQUIREMENTS OF CURRENT A.S.T.M. SPEC. A-615
3. MANHOLE SECTIONS TO MEET REQUIREMENT OF CURRENT A.S.T.M. SPEC. C-478
4. TAPERED JOINT WITH O-RING GASKET TO MEET CURRENT REQUIREMENTS OF A.S.T.M. SPEC. C-361.
5. DOGHOUSE OPENING MAY ONLY BE USED WHEN PLACING A NEW MANHOLE OVER AN EXISTING LINE; OTHERWISE, THE OPENING MUST BE CAST. SIZE, LOCATION & ANGLE OF ENTRY SHALL BE AS REQUIRED BY THE PLANS.
6. MANHOLE SECTION TO BE CASE IN THE BASE OF A MINIMUM OF 2".
7. JOINT CONFIGURATION MAY BE CAST BELL-UP OR SPIGOT-UP.
8. HOLES IN PRECASE UNITS ARE TO BE 4" MIN. TO 8" MAX. LARGER THAN THE OUTSIDE DIA. OF THE PROPOSED PIPE.
9. BASE SECTION TO PROVIDE MIN. 6" CLEARANCE BETWEEN TOP OF PIPE OPENING AND BOTTOM OF BELL AND SPIGOT JOINT.

CHART "A"

MIN. DIMENSIONS			
MH	4'-0"	5'-0"	6'-0"
A	48"	60"	72"
B	58"	72"	86"
C	5"	6"	7"
D	6"	8"	10"

NOTE:
FOR DOGHOUSE BASE CONSTRUCTED OVER PVC PIPE, REMOVE EXISTING PVC PIPE BEYOND BASE DIMENSIONS AND BELL/PLAIN END INSERT SHORT LENGTHS OF PVC PIPE INTO STANDARD MANHOLE BASE WITH FLEXIBLE GASKET CONNECTORS

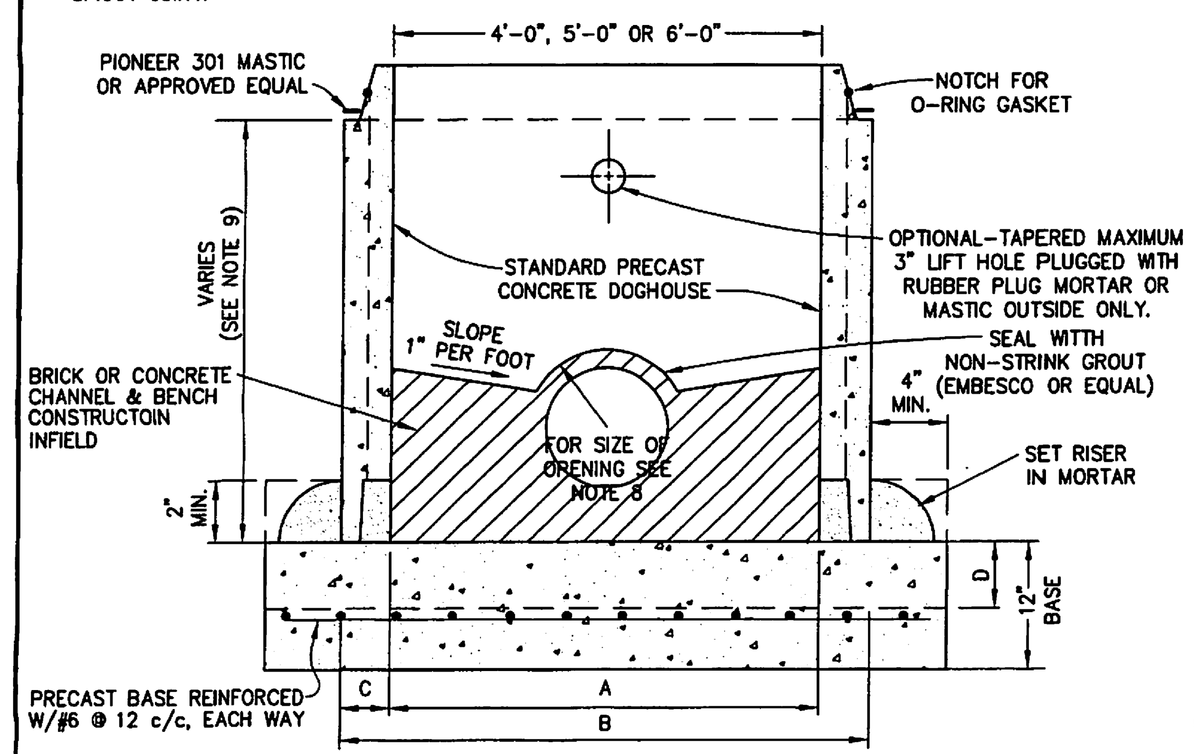

DATE:	STANDARD DETAIL PRECAST CONCRETE MANHOLE DOGHOUSE BASE	DRAWING No.
REVISED: BY		S 4.0
APPROVED:	CITY OF FALLS CHURCH, VIRGINIA DEPARTMENT OF ENVIRONMENTAL SERVICES PUBLIC UTILITIES DIVISION	
PREPARED:		SCALE: NONE

CITY OF FALLS CHURCH SEWER MAIN CONSTRUCTION NOTES

1. Sewer main construction shall comply with the latest issues of the City of Falls Church Technical Specifications and Standard Details for Sewer Main Construction, DEQ/VDH Manual of Practice for Sewerage Systems, VDOT Road & Bridge Specifications & Standards, and Fairfax County Public Facility Manual (PFM).
2. Prior to commencing the sewer main construction, the Contractor shall verify of all the underground utilities (Power, Gas, Telephone, TV Cables, Water, Storm Sewer, within the project site. The contractor shall notify MISS UTILITY @ 811 Three (3) working days in advance. The Contractor shall be solely and entirely liable for any accident and/or damage caused by the construction of this project.
3. The Contractor shall notify the City of Falls Church, Department of Public Works, 703-248-5350, of any conflict with other existing utilities in the field at least (3) working days in advance, in order for the City to correct or adjust the design prior to installing the affected portion of sewer.
4. All sewer mains shall be PVC pipes SDR-35, unless otherwise approved by the City of Falls Church.
5. There is no sewer main less than eight (8) inches in diameter allowed to be permanently installed in the City of Falls Church Sewer System.
6. Sewer house service connection (lateral) and sewer tap to the main shall be privately owned and maintained. The City's responsibility stops at the sewer main, located in the street right-of-way or easement.
7. All construction must be done in compliance with The Occupational Safety and Health Act (OSHA) of 1970, and all rules and regulations thereto appurtenant.
8. The Contractor shall be responsible of any repair and restoration required prior to finish grading and surfacing of the streets and/or easements. Final acceptance will not be considered or granted until after the streets have been resurfaced or the easements finally graded to equal or better than the original condition.
9. Tapping into existing manholes for a sewer pipe 10" or less in diameter will be done by coring. Pipe sizes 12" diameter and larger may be connected to the manhole wall with a short length of pipe with a joint within two feet (2') of the inside face of the manhole wall.
10. The lateral connection to the main sewer shall be installed at two feet (2') minimum distance from any pipe joint (center to center). This shall also apply to the distance between 2 laterals.
11. Manhole frames subject to 115-20 highway loading shall be set in an approved non-shrink grout.
12. Sewer subject to vehicle traffic shall be installed with a minimum cover of 6 feet. Otherwise, it shall be protected from effects of traffic with HS-20 highway loading.

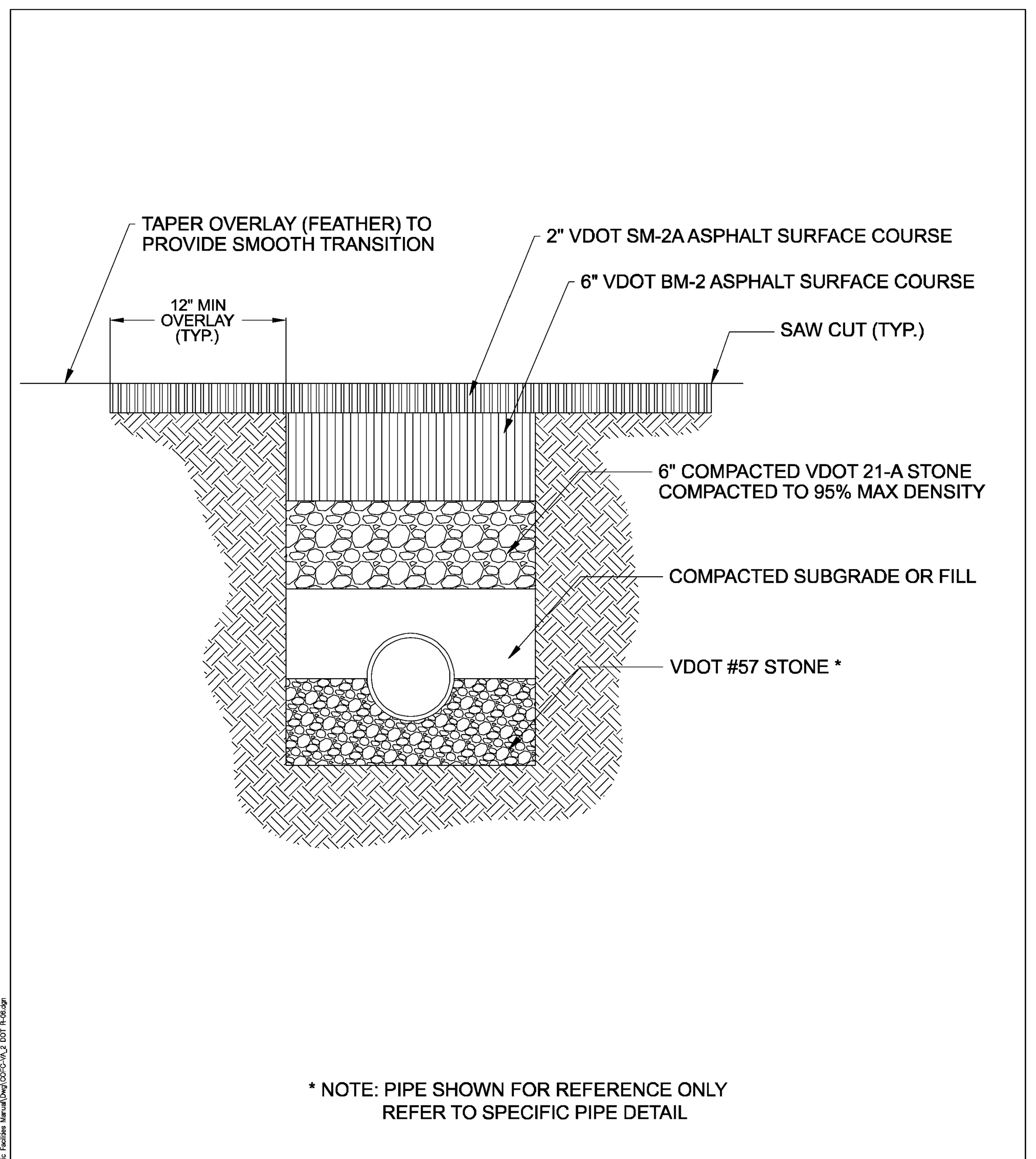

* NOTE: PIPE SHOWN FOR REFERENCE ONLY REFER TO SPECIFIC PIPE DETAIL

SCALE: N.T.S.

ISSUED: 08-13-12	TRENCH RESTORATION DETAIL	DRAWING NO.
REVISION: V1.0.0		R.06
REVISION:		
APPROVED:		

CITY OF FALLS CHURCH VA PUBLIC FACILITIES MANUAL

NOTES:
1. PAVEMENT PATCH FOR UTILITY INSTALLATION
2. PAVEMENT THICKNESS SHOWN HERE ARE MINIMUMS. CONTRACTOR TO MATCH EXISTING PAVEMENT SECTION IF THICKER

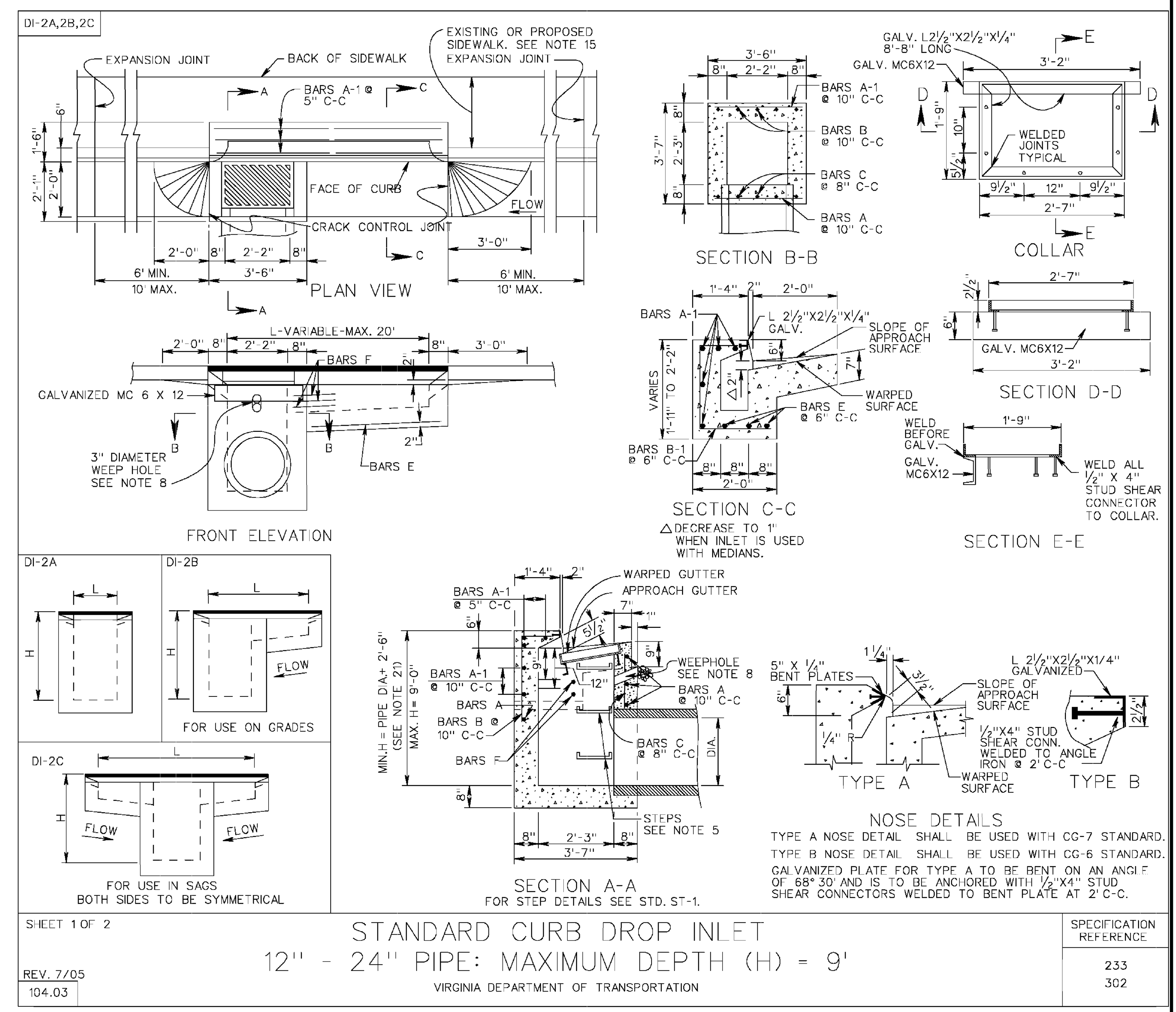

NOTE:
ALL DETAILS PROVIDED ON THIS SHEET ARE CURRENT AT TIME OF SITE PLAN PREPARATION. CONTRACTOR IS RESPONSIBLE FOR USING CURRENT DETAILS AT TIME OF CONSTRUCTION

DETAILS

FOUNDERS ROW
AT THE INTER SECTION OF WEST BROAD STREET, NORTH WEST STREET & PARK AVENUE
CITY OF FALLS CHURCH, VIRGINIA

NO.	DESCRIPTION	DATE
	GMP SET	6/21/18

COMMONWEALTH OF VIRGINIA
KAREN L. S. WHITE
Lic. No.041850
8/14/18
PROFESSIONAL ENGINEER

WALTER L. PHILLIPS INCORPORATED ESTABLISHED 1945
Engineers • Surveyors • Planners
Landscape Architects • Arborists
207 PARK AVENUE
FALLS CHURCH, VIRGINIA 22046
(703) 532-6163 Fax (703) 533-1301
www.WLPINC.com

SCALE: NONE | DATE: SUB01 9/23/2016, SUB02 2/20/2018, GMP 6/21/2018, SUB03 7/10/2018 GMP ADDENDUM01 7/27/2018; SUB04 8/14/18 | DRAWN: AI, KW, DM, BP, TT | CHECKED: KW

SHEET: C-0211

File No. CC-8 Tax Map No. 40-4 Job No. 07-023 Cadd Dwg. File: Q:\sdskproj\07023\dwg\Engineering\Site Plan\07023C-0211.dwg Xref: DIR\Q:\sdskproj\07023\dwg\Engineering\Site Plan\07023B-0001

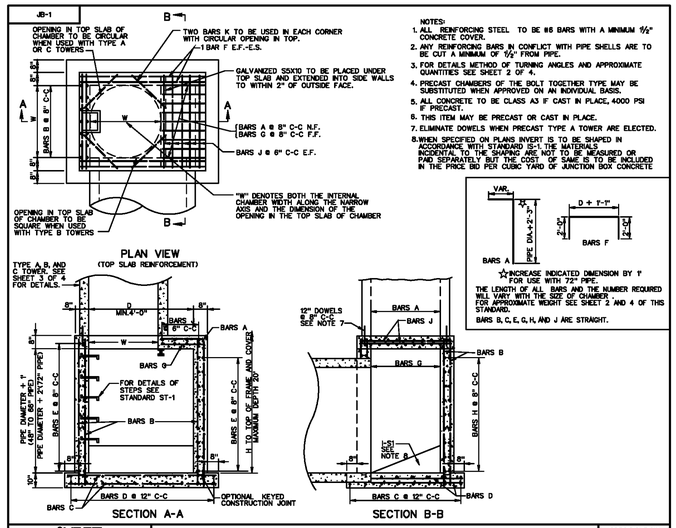

NOTES:
1. ALL REINFORCING STEEL TO BE #6 BARS WITH A MINIMUM 1½" CONCRETE COVER.
2. ANY REINFORCING BARS IN CONFLICT WITH PIPE SHELLS ARE TO BE CUT A MINIMUM OF 1½" FROM PIPE.
3. FOR DETAILS METHOD OF TURNING ANGLES AND APPROXIMATE QUANTITIES SEE SHEET 2 OF 4.
4. PRECAST CHAMBERS OF THE BOLT TOGETHER TYPE MAY BE SUBSTITUTED WHEN APPROVED ON AN INDIVIDUAL BASIS.
5. ALL CONCRETE TO BE CLASS A3 IF CAST IN PLACE, 4000 PSI IF PRECAST.
6. THIS ITEM MAY BE PRECAST OR CAST IN PLACE.
7. ELIMINATE DOWELS WHEN PRECAST TYPE A TOWER ARE ELECTED.
8. WHEN SPECIFIED ON PLANS INVERT IS TO BE SHAPED IN ACCORDANCE WITH STANDARD IS-1. THE MATERIALS INCIDENTAL TO THE SHAPING ARE NOT TO BE MEASURED OR PAID SEPARATELY BUT THE COST OF SAME IS TO BE INCLUDED IN THE PRICE BID PER CUBIC YARD OF JUNCTION BOX CONCRETE

☆INCREASE INDICATED DIMENSION BY 1' FOR USE WITH 72" PIPE.

THE LENGTH OF ALL BARS AND THE NUMBER REQUIRED WILL VARY WITH THE SIZE OF CHAMBER. FOR APPROXIMATE WEIGHT SEE SHEET 2 AND 4 OF THIS STANDARD.

BARS B, C, E, G, H, AND J ARE STRAIGHT.

*SEE MODIFICATIONS ON SHEET C-0802 FOR STRUCTURE #3

DISPLACEMENT QUANTITIES FOR PIPE OPENINGS

(TO BE USED WITH ST'D JB-1 JUNCTION BOX)

JB-1

PIPE SIZE	PIPE CLASS	CONCRETE 0° Cu. Yards	CONCRETE 15° Cu. Yards	CONCRETE 30° Cu. Yards	CONCRETE 45° Cu. Yards	REINF. STEEL Lbs.
12"	III, IV, V	.035	.036	.040	.050	17.67
12"	CM	.019	.020	.022	.027	11.06
15"	III, IV, V	.050	.052	.058	.071	24.88
15"	CM	.030	.031	.034	.042	15.93
18"	III, IV, V	.069	.072	.080	.099	33.23
18"	CM	.043	.044	.049	.061	21.68
24"	III, IV, V	.118	.122	.137	.168	53.53
24"	CM	.076	.078	.087	.108	35.83
30"	III, IV, V	.179	.186	.208	.256	78.54
30"	CM	.118	.122	.137	.168	53.53
36"	III, IV, V	.254	.263	.294	.362	108.76
36"	CM	.170	.176	.197	.242	74.76
42"	III, IV, V	.341	.353	.395	.486	143.33
42"	CM	.231	.240	.268	.330	99.53
48"	III, IV, V	.441	.457	.511	.629	182.90
48"	CM	.302	.313	.350	.431	127.85
54"	III, IV	.554	.574	.642	.789	227.29
54"	V	.580	.600	.672	.826	237.42
54"	CM	.382	.395	.443	.545	159.70
60"	III, IV	.679	.704	.787	.965	276.49
60"	V	.708	.734	.821	1.009	287.65
60"	CM	.472	.481	.551	.673	195.09
66"	III, IV	.818	.847	.948	1.166	330.50
66"	V	.849	.880	.985	1.211	342.70
66"	CM	.571	.591	.662	.814	234.02
72"	III, IV	.969	1.004	1.123	1.382	389.34
72"	V	1.003	1.040	1.163	1.431	402.58
72"	CM	.679	.704	.787	.969	276.49

SPECIFICATION REFERENCE: 105, 233, 302

JUNCTION BOX DISPLACEMENT QUANTITIES FOR 48" - 72" PIPE CULVERTS

VIRGINIA DEPARTMENT OF TRANSPORTATION

VDOT ROAD AND BRIDGE STANDARDS — REVISION DATE — SHEET 4 OF 4 — 106.13

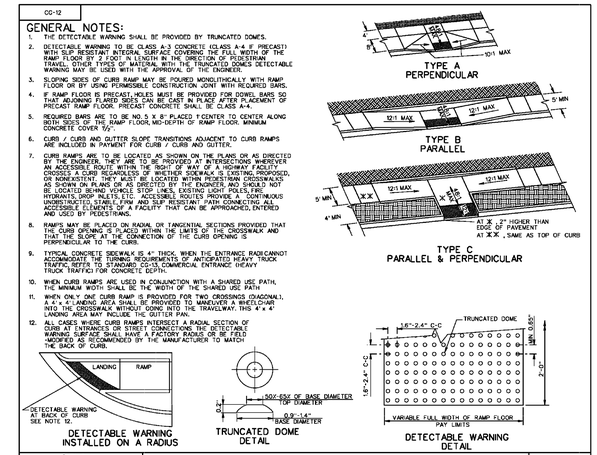

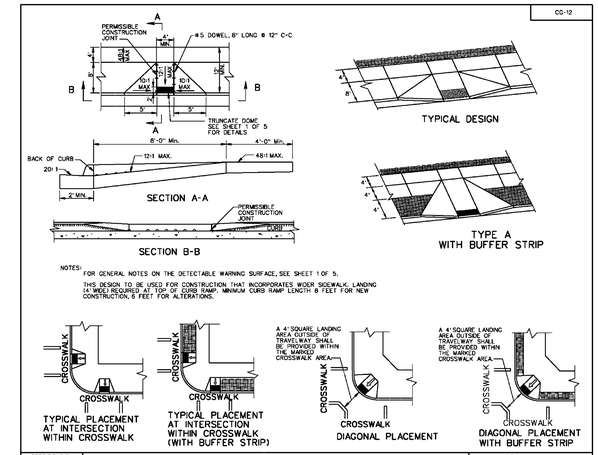

CITY OF FALLS CHURCH FIRE MARSHAL
300 PARK AVENUE
FALLS CHURCH, VA 22046
Phone: (703) 248-5058 Fax: (703) 248-5158
Email: FireMarshal@fallschurchva.gov

Fire Department Connection (FDC) Signage

The Falls Church City Code requires all buildings with a Fire Department Connection (Sprinkler and/or Standpipe) must have FDC signage located 8-12 feet above the Fire Department Connection. Signage must be glow-in-the-dark or reflective with a RED background with at least 6 inch white lettering. Minimum size of the sign should be 14"x10". The code also requires that FDC connections be clear from trees, brush or any barriers that may hamper access to the suppression system by the fire department.

In addition, all NEW buildings are required to also include a RED exterior strobe light either above or just below the FDC sign that is tied into the fire alarm system.

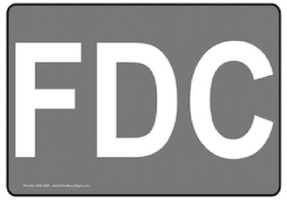

Sample from http://www.compliancesigns.com/NHE-9466.shtml

Questions regarding the procedures and clarification may be directed to the City of Falls Church Fire Marshal at FireMarshal@fallschurchva.gov or calling (703) 248-5058.

http://www.fallschurchva.gov/firemarshal

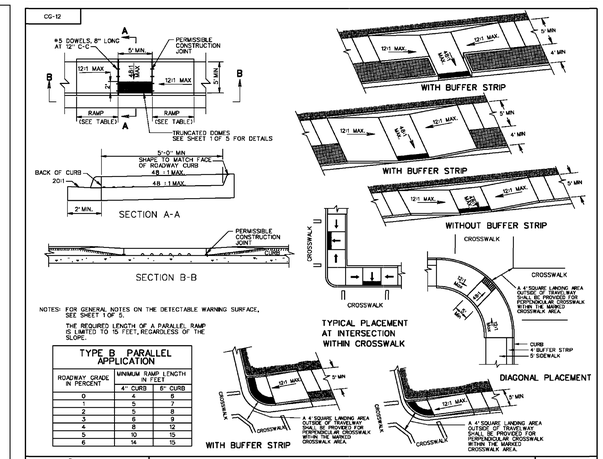

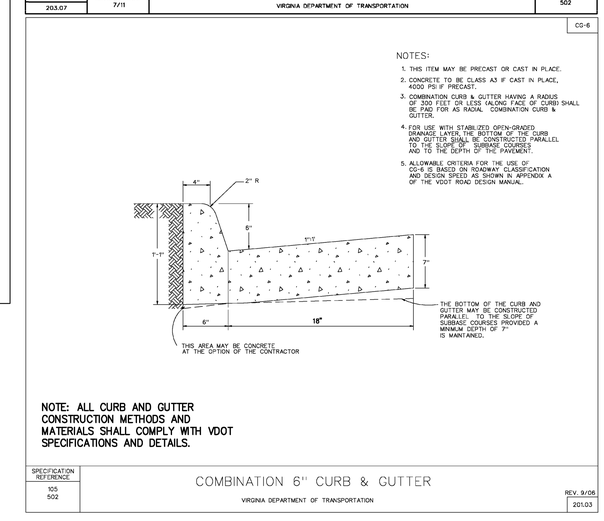

NOTE:
ALL DETAILS PROVIDED ON THIS SHEET ARE CURRENT AT TIME OF SITE PLAN PREPARATION. CONTRACTOR IS RESPONSIBLE FOR USING CURRENT DETAILS AT TIME OF CONSTRUCTION

WALTER L. PHILLIPS INCORPORATED
Engineers • Surveyors • Planners
Landscape Architects • Arborists
207 PARK AVENUE
FALLS CHURCH, VIRGINIA 22046
(703) 532-6163 Fax (703) 533-1301
www.WLPINC.com
ESTABLISHED 1945

COMMONWEALTH OF VIRGINIA — KAREN L.S. WHITE Lic. No.041850 — 8/14/18

NO.	DESCRIPTION	DATE
	GMP SET	6/21/18

DATE: SUB#1 10/23/2015, SUB#2 2/26/2016, GMP 8/21/2018, SUB#3 7/10/2018
GMP ADDENDUM#1 7/27/2018, SUB#4 8/14/18
SCALE: NONE
DRAWN: ALW, DM, BP, TT
CHECKED: KW

DETAILS

FOUNDERS ROW

AT THE INTER SECTION OF WEST BROAD STREET, NORTH WEST STREET & PARK AVENUE CITY OF FALLS CHURCH, VIRGINIA

SHEET: C-0212

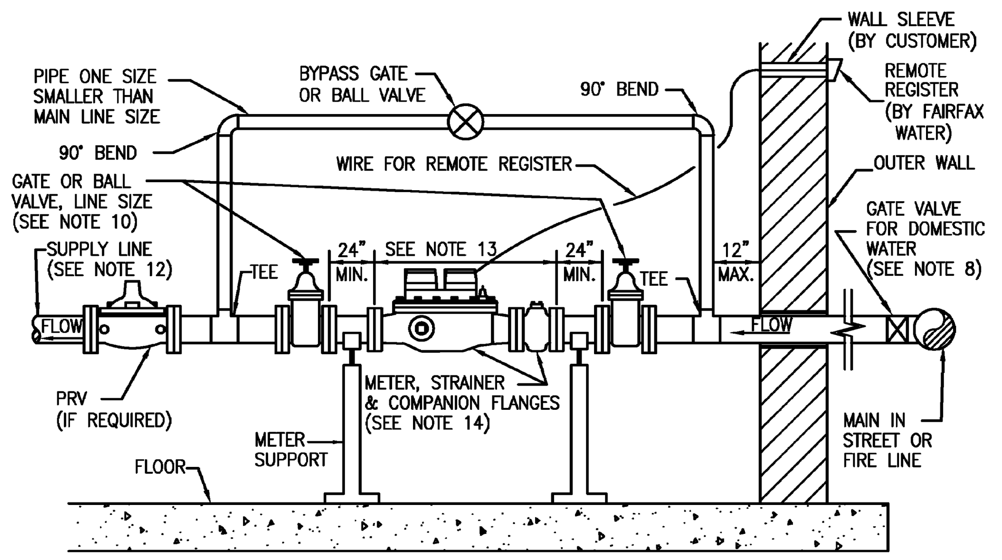

TYPICAL INSTALLATION SECTION VIEW

NOTES:

1. THE WATER METER WILL BE LOCATED IN AN ACCESSIBLE LOCATION AND WILL NOT BE INSTALLED UNDER EXISTING PIPING OR CLOSE TO OTHER FACILITIES. CRAWL SPACES ARE UNACCEPTABLE.
2. WATER METER TO BE INSTALLED NOT MORE THAN 2.0' ABOVE THE FLOOR, OR CLOSER THAN 1.0' TO ANY WALL OR OTHER FIXED OBJECT.
3. THE DEVELOPER SHALL MAKE PROVISIONS FOR DISCHARGE OF A LARGE VOLUME OF EXCESS WATER RESULTING FROM METER TESTING AND METER REPAIRS AS REQUIRED BY FAIRFAX WATER.
4. THE METER INSTALLATION WILL BE INSPECTED AND APPROVED BY FAIRFAX WATER. CALL 703-289-6402 FOR INSPECTION PRIOR TO PLACING LINE IN SERVICE. (REMOTE REGISTER TO BE INSTALLED OUTSIDE BUILDING IF REQUIRED).
5. IT SHALL BE THE RESPONSIBILITY OF THE OWNER TO PREVENT THE METER FROM FREEZING.
6. SUPPORT IS REQUIRED FOR THE METER.
7. INCOMING LINE SIZE MUST BE THE SAME AS METER SIZE AT LEAST 3' BEFORE THE METER.
8. A 3" MINIMUM GATE VALVE WITH A 2" OPERATING NUT MUST BE INSTALLED AT THE MAIN IN THE STREET OR FIRE LINE.
9. NO TAPS, PRV'S, STRAINERS, OR BACKFLOW PREVENTOR ARE TO BE INSTALLED BEFORE METER.
10. GATE VALVES OR BALL VALVES MUST BE INSTALLED ON BOTH SIDES OF THE METER, AND ON THE BYPASS. BUTTERFLY VALVES ARE NOT ACCEPTABLE.
11. FAIRFAX WATER TO SUPPLY AND INSTALL REMOTE REGISTER. WIRE FOR REMOTE REGISTER TO BE FURNISHED BY FAIRFAX WATER AND INSTALLED BY CUSTOMER IF REQUIRED.
12. BACKFLOW PREVENTIONS WILL BE REQUIRED IN ACCORDANCE WITH FAIRFAX COUNTY'S REGULATIONS.
13. 3" METER IS 24" LONG, 4" IS 29" LONG AND 6" IS 36" LONG.
14. METER, STRAINER AND COMPANION FLANGES FURNISHED BY FAIRFAX WATER AND INSTALLED BY CUSTOMER.

FAIRFAX WATER STANDARD DETAILS — INTERIOR METER INSTALLATION WITH BY-PASS 3" AND LARGER COMPOUND METERS
SCALE: NOT TO SCALE — DRAWING NO.: 11 — DATE: 7/17

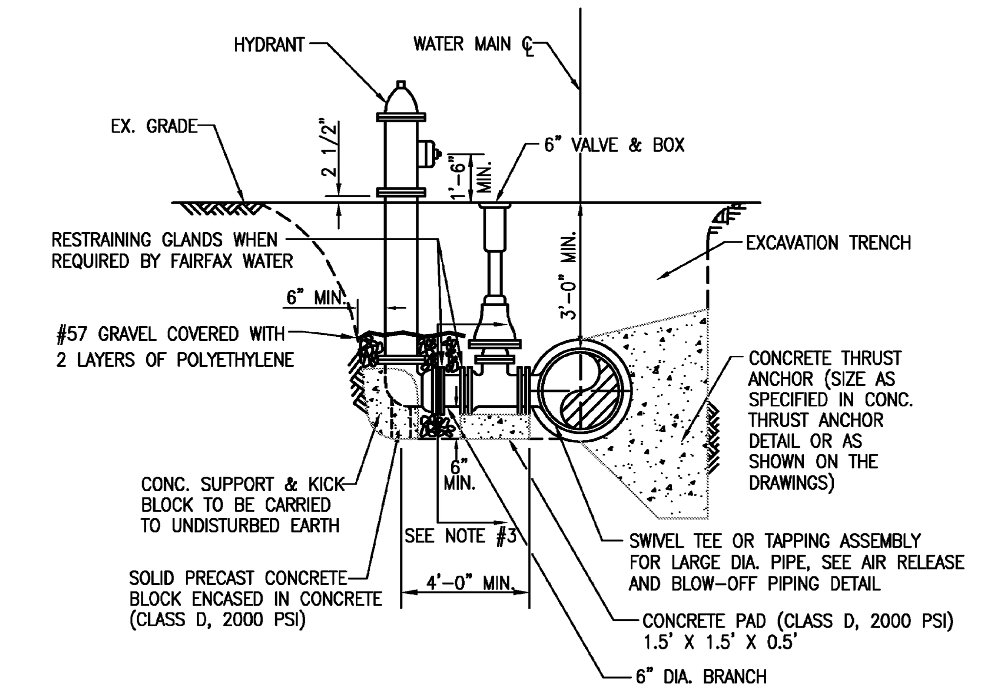

NOTES:

1. IF SWIVEL TEE IS NOT USED, VALVE MUST BE RESTRAINED TO TEE WITH RESTRAINING GLANDS BY CONTRACTOR.
2. HYDRANTS SHALL HAVE SHOP-APPLIED COATINGS AS FOLLOWS:
   - HYDRANT BARREL: KENNEDY SAFETY RED OR MUELLER RED #10
   - TOPS AND CAPS: KENNEDY SILVER OR MUELLER SILVER #18
   - WHERE INDICATED BY FAIRFAX WATER, THE TOP SHALL BE SHOP-COATED RED AND THE BARREL AND CAPS SHALL BE SHOP-COATED SILVER IN LIEU OF THE ABOVE.
3. POLYETHYLENE ENCASEMENT TO BE INSTALLED UP TO 6-INCHES BELOW PROPOSED GRADE. ENCASEMENT SHALL BE INSTALLED SO AS NOT TO PREVENT DISCHARGE OF WATER THROUGH HYDRANT DRAIN HOLES.
4. FOR HYDRANT LOCATION IN REGARD TO FACE OF CURB, SEE FAIRFAX COUNTY PUBLIC FACILITIES MANUAL.

FAIRFAX WATER STANDARD DETAILS — STANDARD HYDRANT INSTALLATION
SCALE: NOT TO SCALE — DRAWING NO.: 30 — DATE: 7/17

PIPE SIZE INCHES	DEGREE OF BEND (ø)	(1) WORKING PRESSURE 175 PSI L	H	T
6	90	3.0	2.0	1.25
	45	2.0	1.5	1.0
	22.5	1.5	1.0	1.0
8	90	4.0	2.5	1.75
	45	2.5	2.0	1.0
	22.5	2.0	1.5	1.0
12	90	5.5	4.0	2.25
	45	4.0	3.0	1.5
	22.5	3.0	2.0	1.0
16	90	7.5	5.0	3.25
	45	5.0	4.5	2.0
	11.25/22.5	4.0	3.0	1.5
20	90	9.5	6.0	4.0
	45	7.0	4.5	2.75
	11.25/22.5	5.5	3.0	2.0
24	90	13.0	6.5	5.5
	45	9.0	5.0	3.5
	11.25/22.5	6.0	4.0	2.0

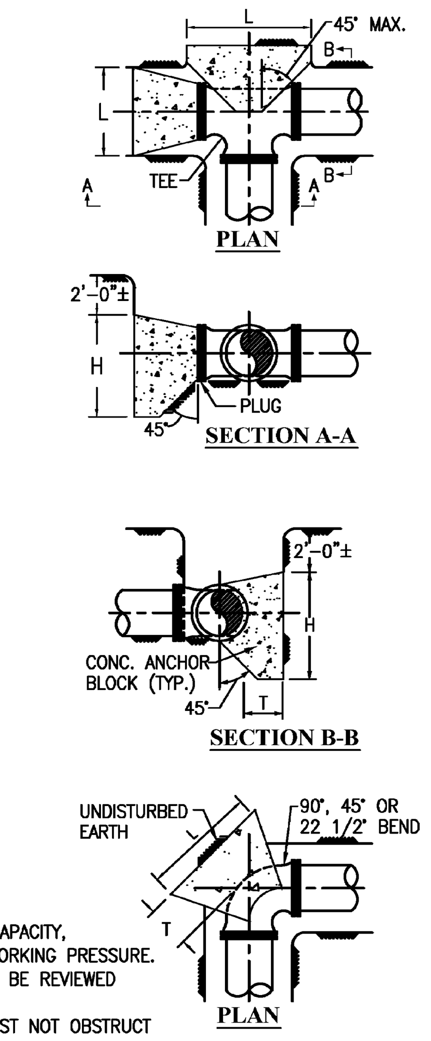

NOTES:

1. MINIMUM CONCRETE ANCHOR BLOCK DIMENSIONS IN FEET.
2. PROVIDE FORM WORK FOR ALL CONCRETE.
3. CONCRETE SHALL BE CLASS D 2000 PSI.
4. THE ABOVE TABLE IS BASED ON 2000 PSF SOIL BEARING CAPACITY, R=2PA SIN (ø/2) AND FOR A TEST PRESSURE = 1.5 x WORKING PRESSURE.
5. ANCHOR BLOCK DESIGN FOR PIPE LARGER THAN 24" SHALL BE REVIEWED ON AN INDIVIDUAL BASIS BY FAIRFAX WATER.
6. WRAP FITTING WITH POLYETHYLENE SHEETING. CONCRETE MUST NOT OBSTRUCT ACCESS TO MECHANICAL JOINT ASSEMBLY.
7. CONCRETE ANCHOR BLOCK DIMENSIONS FOR TEES TO BE SAME AS FOR 90° BENDS.
8. HEIGHT OF CONCRETE ANCHOR BLOCK ABOVE PIPE CENTERLINE IS 1/3 THE H DIMENSION.
9. BLOCKING SHALL BACK TO UNDISTURBED EARTH.

FAIRFAX WATER STANDARD DETAILS — CONCRETE THRUST ANCHORS
SCALE: NOT TO SCALE — DRAWING NO.: 23 — DATE: 7/17

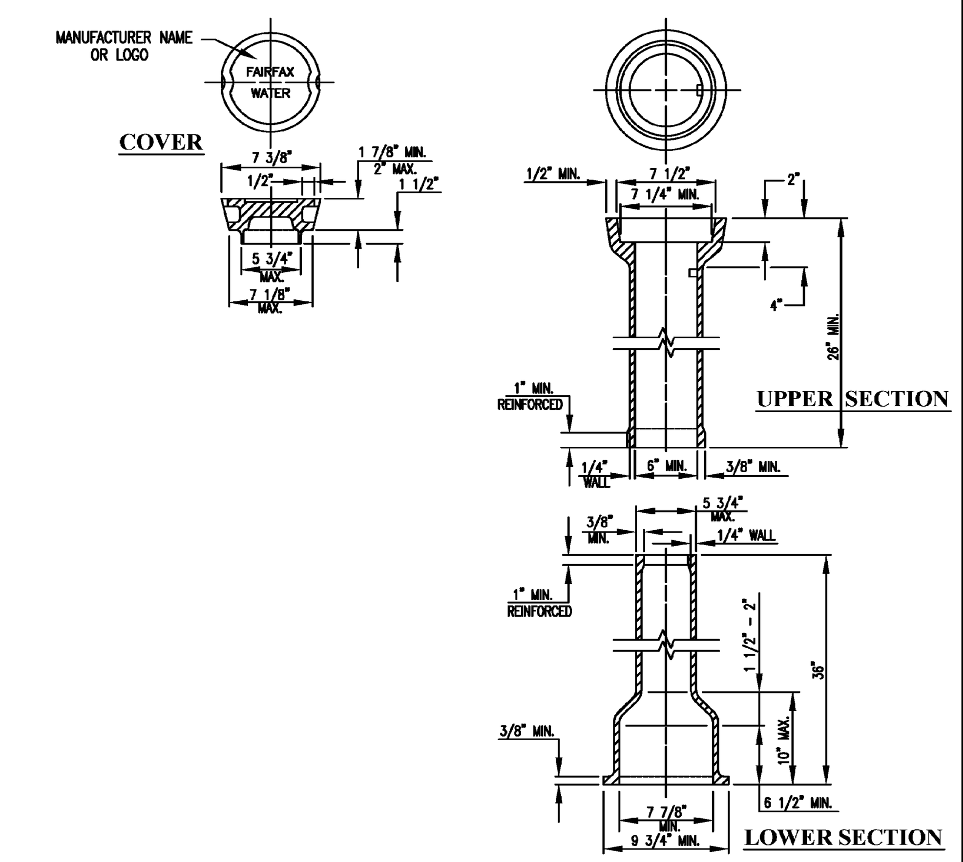

NOTES:

1. THE MANUFACTURER IDENTIFICATION AND COUNTRY OF ORIGIN (IF OTHER THAN U.S.) SHALL BE CAST INTO ALL PARTS.
2. GUARD POSTS ARE NOT TO BE INSTALLED AT VALVES UNLESS INDICATED ON DRAWINGS, OR AS SPECIFIED BY FAIRFAX WATER.
3. VALVE BOX MUST MEET SPECIFICATIONS CONTAINED IN FAIRFAX WATER'S APPROVED PRODUCTS LIST.
4. FOR VALVE BOXES DEEPER THAN SIX FEET, USE 5-INCH DIAMETER GRAY CAST IRON (SOIL) PIPE TO EXTEND STANDARD TOP AND BOTTOM SECTIONS.
5. STACKING OF VALVE BOX SECTIONS IS NOT ACCEPTABLE.

FAIRFAX WATER STANDARD DETAILS — VALVE BOX
SCALE: NOT TO SCALE — DRAWING NO.: 27 — DATE: 7/17

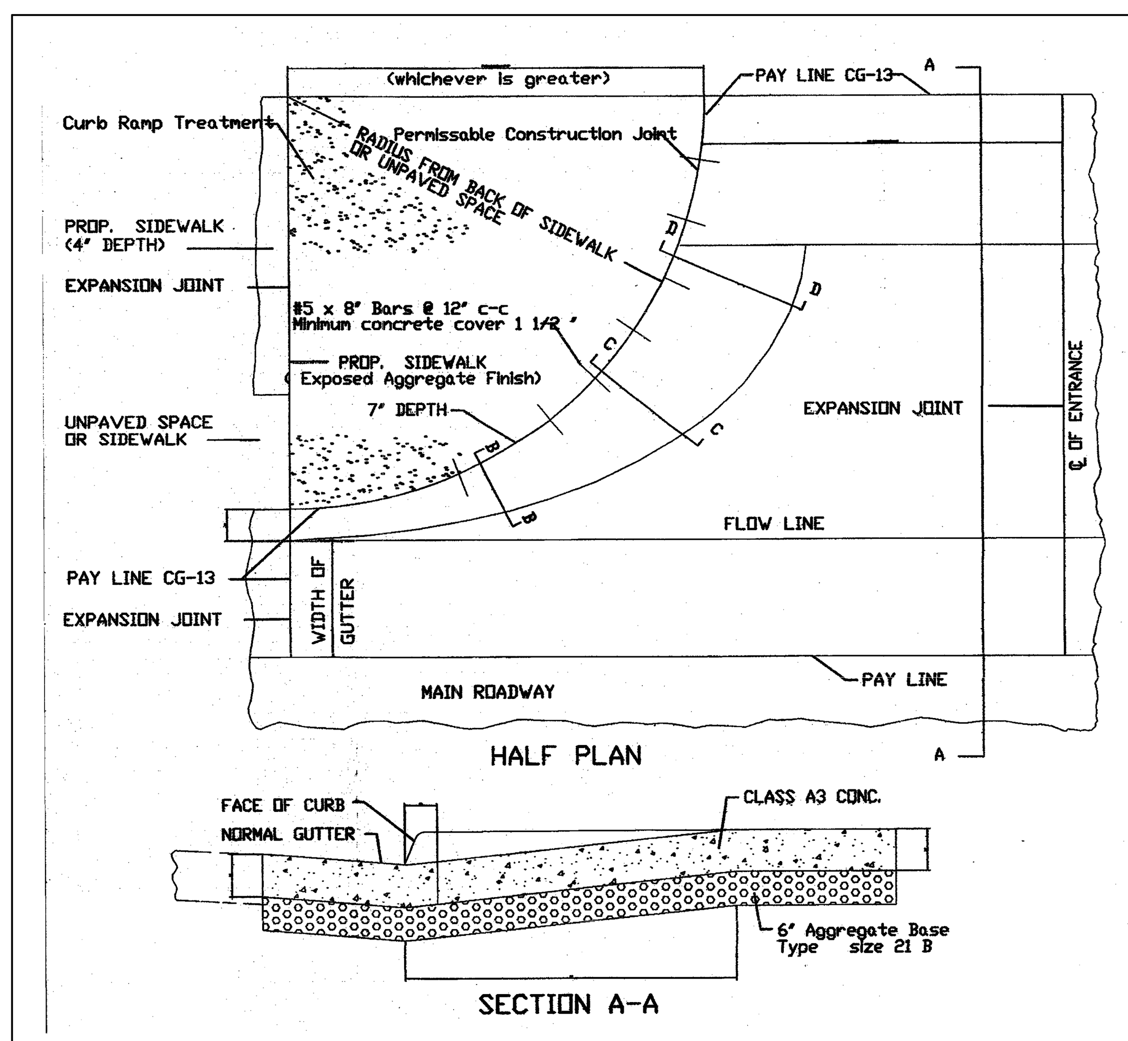

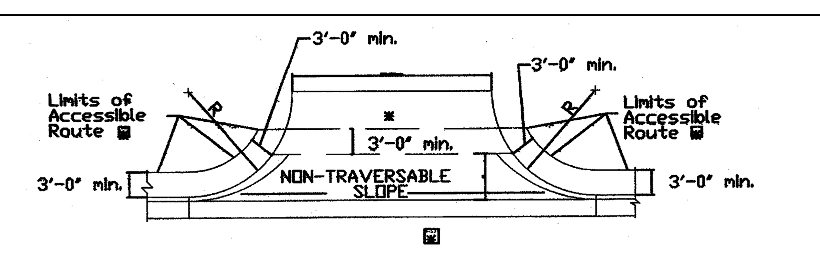

ACCESSIBLE ROUTE DETAIL

Detail to be used when the combined width of unpaved space and sidewalk space is less than 7'.

▣ Accessible route is defined as a continuous unobstructed, stable, firm and slip resistant path connecting all accessible elements of a facility that can be approached, entered and used by persons with mobility impairments.

* If accessible routes are being provided, a minimum 3' traversable width is required.

NOTES:

Prop. 7' Sidewalk is to be poured monolithically with Entrance or by using permissable construction joint with required bars.

Proposed 7' sidewalk to be class A-3 concrete with exposed aggregate finish.

Required bars are to be No. 5x8' placed 1' center to center along back of curb, mid-depth of sidewalk. Minimum Concrete cover 1 1/2 ".

All details and dimensions not shown are the same as Standard CG-9D.

This design may also be applied to other Entrance Standards as the need arises.

Limits of Exposed aggregate sidewalk for curb ramp treatment

When used in conjunction with Standard CG-3 or CG-7, the curb face on. This Standard is to be adjusted to match the mountable curb configuration.

STANDARD CG-13
SECTION — NTS

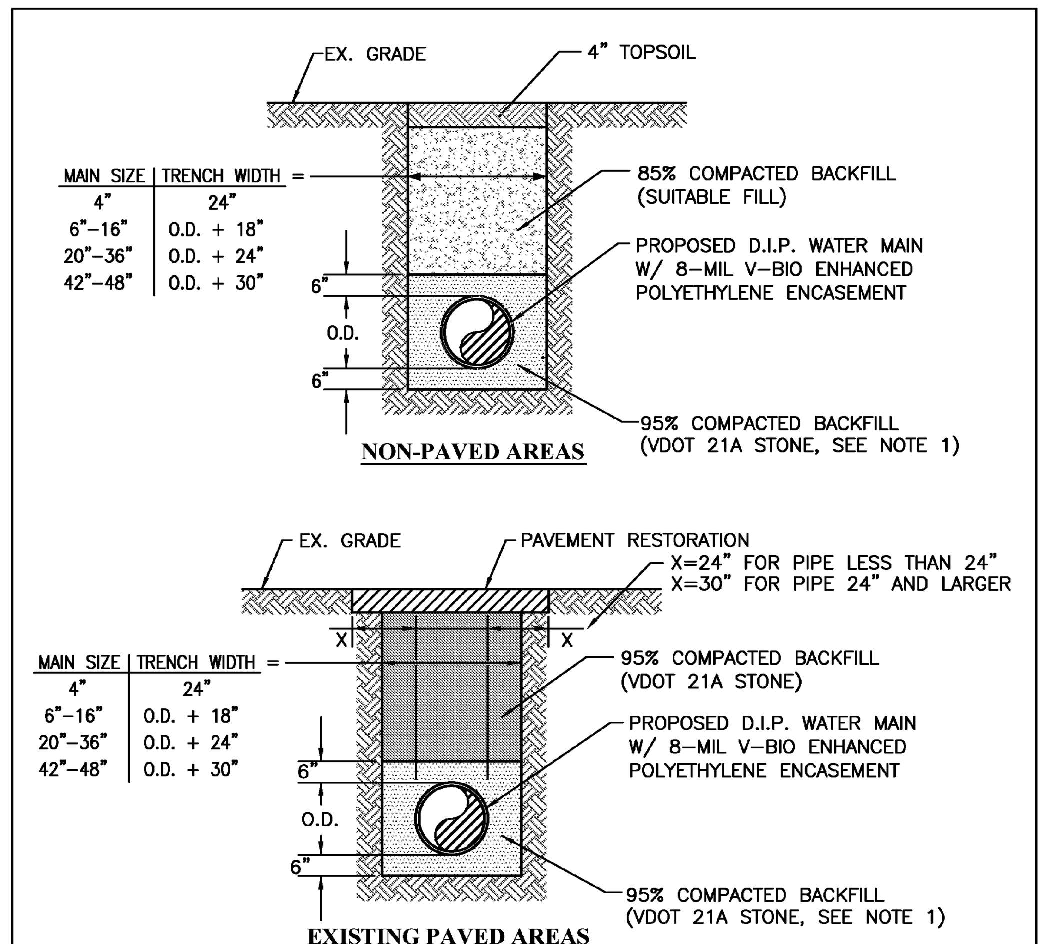

NOTES:

1. VDOT NO. 57 STONE SHALL BE USED AT CREEK CROSSINGS OR IN AREAS WHERE TRENCH CONTAINS GROUND WATER.
2. ALL PAVEMENT RESTORATION AND COMPACTED BACKFILL WITHIN VDOT RIGHT-OF-WAY SHALL ADHERE TO ALL APPLICABLE VDOT SPECIFICATIONS.
3. RESTRAINED JOINT PIPE SHALL BE IDENTIFIED WITH MARKING TAPE PLACED 2 FEET ABOVE PIPE.
4. ALL WATER MAIN INSTALLATION IN AREAS WITH PROPOSED PAVING SHALL ADHERE TO APPROVED DEVELOPMENT PLAN.

FAIRFAX WATER STANDARD DETAILS — TRENCH - DUCTILE IRON PIPE
SCALE: NOT TO SCALE — DRAWING NO.: 12 — DATE: 7/17

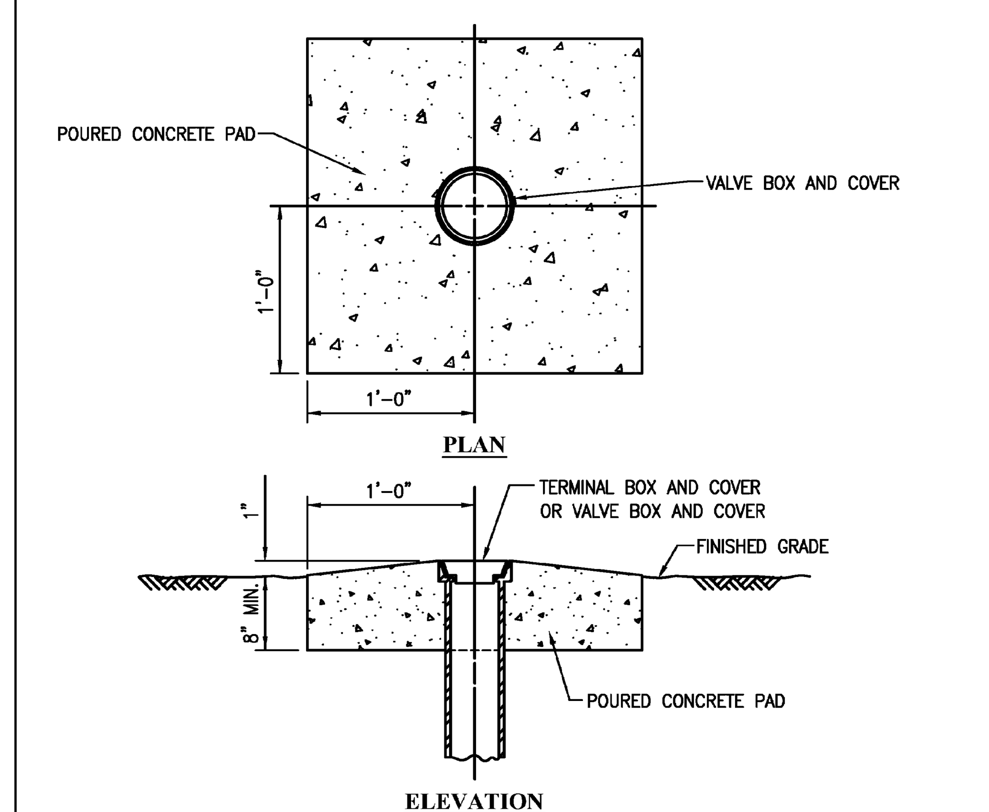

NOTES:

1. CONCRETE PADS FOR WATER MAIN VALVE AND TERMINAL BOX ARE TO BE INSTALLED USING REQUIREMENTS FOR CLASS D CONCRETE (2000 PSI).
2. PADS TO BE FORMED AND PROPERLY FINISHED.
3. VALVE BOX CONCRETE PAD TO BE INSTALLED ON ALL VALVES IN NON-PAVED AREAS OR AS DIRECTED BY FAIRFAX WATER.
4. GUARD POSTS ARE NOT TO BE INSTALLED AT VALVES UNLESS INDICATED ON DRAWINGS, OR AS SPECIFIED BY FAIRFAX WATER.

FAIRFAX WATER STANDARD DETAILS — VALVE BOX CONCRETE PAD
SCALE: NOT TO SCALE — DRAWING NO.: 28 — DATE: 7/17

NOTE:
ALL DETAILS PROVIDED ON THIS SHEET ARE CURRENT AT TIME OF SITE PLAN PREPARATION. CONTRACTOR IS RESPONSIBLE FOR USING CURRENT DETAILS AT TIME OF CONSTRUCTION

DETAILS

FOUNDERS ROW
AT THE INTER SECTION OF WEST BROAD STREET, NORTH WEST STREET & PARK AVENUE
CITY OF FALLS CHURCH, VIRGINIA

NO.	DESCRIPTION	DATE
	GMP SET	6/21/18

COMMONWEALTH OF VIRGINIA — KAREN L. S. WHITE Lic. No.041850 8/14/18 PROFESSIONAL ENGINEER

WALTER L. PHILLIPS INCORPORATED ESTABLISHED 1945
Engineers • Surveyors • Planners
Landscape Architects • Arborists
207 PARK AVENUE
FALLS CHURCH, VIRGINIA 22046
(703) 532-6163 Fax (703) 533-1301
www.WLPINC.com

SCALE: NONE
DATE: SUB01 9/23/2016, SUB02 2/20/2018, GMP 6/21/2018, SUB03 7/10/2018
GMP ADDENDUM01 7/27/2018; SUB04 8/14/18
DRAWN: AI, KW, DM, BP, TT
CHECKED: KW

SHEET: C-0213

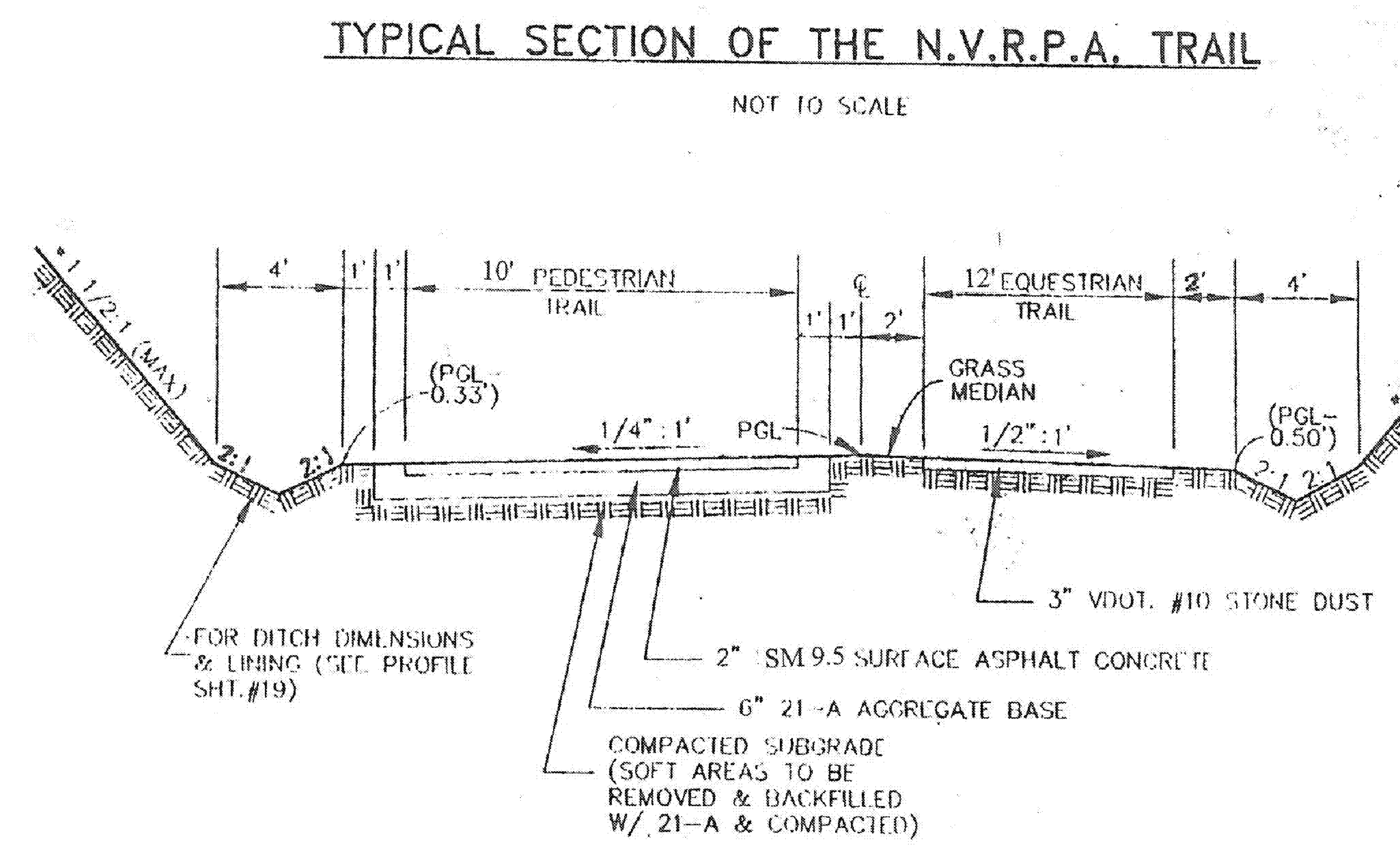

FOR THE W&OD TRAIL RE-ALIGNMENT

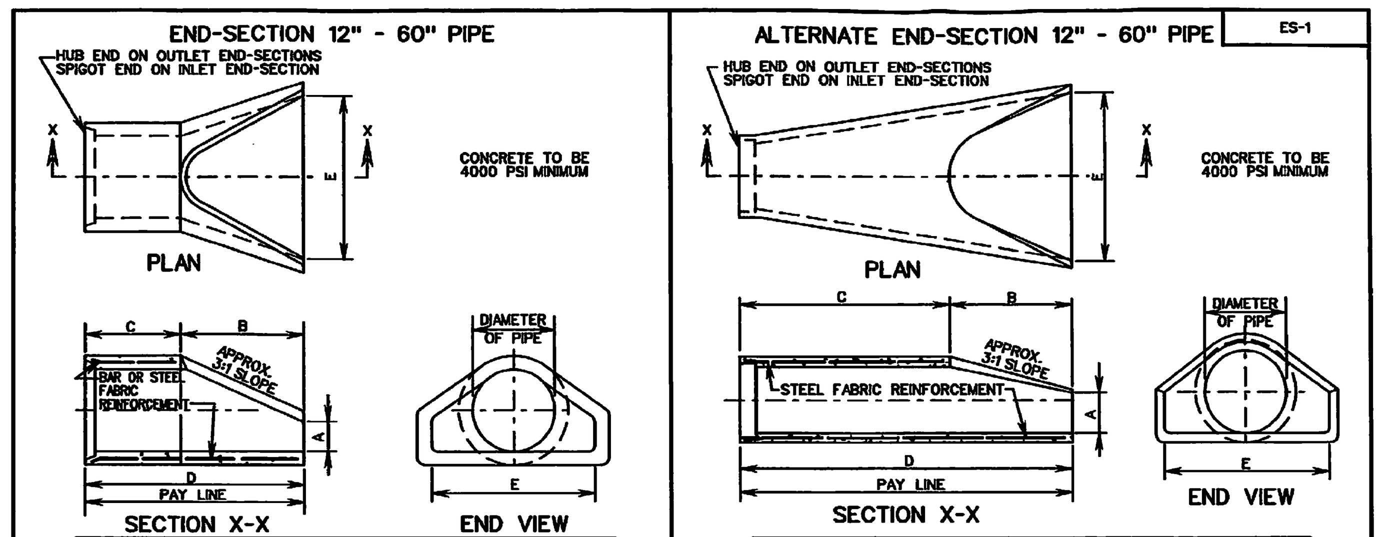

END SECTION DIMENSIONS

PIPE DIAMETER	A	B	C	D	E
12"	4"	2'-0"	2'-0"	4'-0"	2'-0"
15"	6"	2'-3"	1'-9"	4'-0"	2'-6"
18"	9"	2'-3"	1'-9"	4'-0"	3'-0"
21"	9 1/4"	2'-11"	2'-1"	5'-0"	3'-6"
24"	9 1/2"	3'-7"	2'-6"	6'-1"	4'-0"
27"	10 3/4"	4'-0"	2'-1"	6'-1"	4'-6"
30"	1'-0"	4'-6"	1'-7 3/4"	6'-1 3/4"	5'-0"
33"	1'-1 1/2"	4'-10 1/2"	2'-3 1/4"	7'-1 3/4"	5'-6"
36"	1'-3"	5'-3"	2'-10 3/4"	8'-1 3/4"	6'-0"
42"	1'-9"	5'-3"	2'-11"	8'-2"	6'-6"
48"	2'-0"	6'-0"	2'-2"	8'-2"	7'-0"
54"	2'-3"	5'-5"	2'-9 1/4"	8'-2 1/4"	7'-6"
60"	2'-11"	5'-0"	3'-3"	8'-3"	8'-0"

END SECTION DIMENSIONS

PIPE DIAMETER	A	B	C	D	E
12"	4"	2'-0"	4'-1"	6'-1"	2'-0"
15"	6"	2'-3"	3'-10"	6'-1"	2'-6"
18"	9"	2'-3"	3'-10"	6'-1"	3'-0"
21"	9"	2'-11"	3'-2"	6'-1"	3'-6"
24"	10"	3'-7"	2'-8"	6'-3"	4'-0"
27"	10 1/2"	4'-0"	2'-1 1/2"	6'-1 1/2"	4'-6"
30"	1'-0"	4'-6"	1'-7 3/4"	6'-1 3/4"	5'-0"
33"	1'-1 1/2"	4'-10 1/2"	3'-3 1/4"	8'-1 3/4"	5'-6"
36"	1'-3"	5'-3"	2'-10 3/4"	8'-1 3/4"	6'-0"
42"	1'-9"	5'-3"	2'-11"	8'-2"	6'-6"
48"	2'-0"	6'-0"	2'-2"	8'-2"	7'-0"
54"	2'-3"	5'-5"	2'-11"	8'-4"	7'-6"
60"	2'-6"	5'-0"	3'-3"	8'-3"	8'-0"

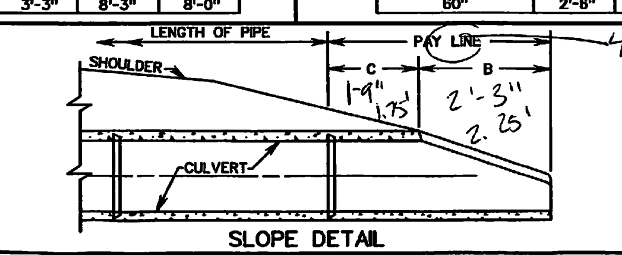

NOTES:
PIPE LENGTHS SHOWN ON PLANS ARE BASED ON END-SECTION DESIGN SHOWN ON THE LEFT. IF THE CONTRACTOR ELECTS TO USE THE ALTERNATE DESIGN SHOWN ON THE RIGHT, LENGTHS WILL BE REDUCED BY THE DIFFERENCE IN DIMENSION "D".

SPECIFICATION REFERENCE	FLARED END SECTION	VDOT ROAD AND BRIDGE STANDARDS	
302	12" - 60" CONCRETE PIPE CULVERTS VIRGINIA DEPARTMENT OF TRANSPORTATION	REVISION DATE	SHEET 1 OF 1 102.01

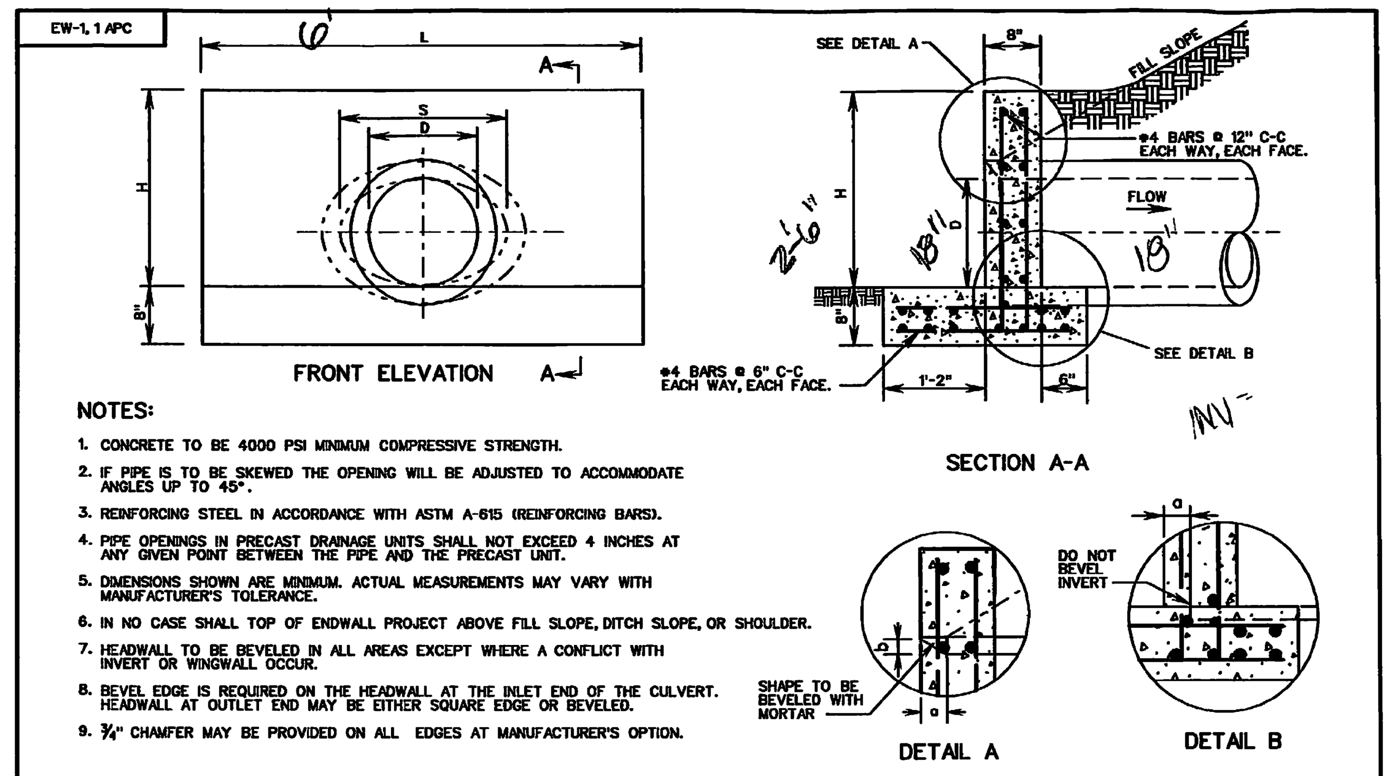

NOTES:

1. CONCRETE TO BE 4000 PSI MINIMUM COMPRESSIVE STRENGTH.
2. IF PIPE IS TO BE SKEWED THE OPENING WILL BE ADJUSTED TO ACCOMMODATE ANGLES UP TO 45°.
3. REINFORCING STEEL IN ACCORDANCE WITH ASTM A-615 (REINFORCING BARS).
4. PIPE OPENINGS IN PRECAST DRAINAGE UNITS SHALL NOT EXCEED 4 INCHES AT ANY GIVEN POINT BETWEEN THE PIPE AND THE PRECAST UNIT.
5. DIMENSIONS SHOWN ARE MINIMUM. ACTUAL MEASUREMENTS MAY VARY WITH MANUFACTURER'S TOLERANCE.
6. IN NO CASE SHALL TOP OF ENDWALL PROJECT ABOVE FILL SLOPE, DITCH SLOPE, OR SHOULDER.
7. HEADWALL TO BE BEVELED IN ALL AREAS EXCEPT WHERE A CONFLICT WITH INVERT OR WINGWALL OCCUR.
8. BEVEL EDGE IS REQUIRED ON THE HEADWALL AT THE INLET END OF THE CULVERT. HEADWALL AT OUTLET END MAY BE EITHER SQUARE EDGE OR BEVELED.
9. 3/4" CHAMFER MAY BE PROVIDED ON ALL EDGES AT MANUFACTURER'S OPTION.

EW-1PC

ENDWALL FOR CIRCULAR PIPE

DIAMETER OF PIPE CULVERT

D	12"	15"	18"	21" OR 24"	27" OR 30"	33" OR 36"
H	2'-0"	2'-3"	2'-6"	3'-2"	3'-10"	4'-4"
L	4'-0"	5'-0"	6'-0"	8'-0"	10'-0"	12'-0"
a	0'-1 1/4"	0'-1 3/4"	0'-2"	0'-2 1/2"	0'-3 1/4"	0'-3 3/4"
b	0'-1"	0'-1 1/4"	0'-1 1/2"	0'-2"	0'-2 1/2"	0'-3"

EW-1APC

ENDWALL FOR ELLIPTICAL PIPE

SIZE OF ELLIPTICAL PIPE CULVERT (SPAN x RISE)

S x D	23" x 14"	30" x 19"	34" x 22"	38" x 24"	42" x 27"	45" x 29"	49" x 32"	53" x 34"
H	1'-10"	2'-4"	2'-7"	2'-9"	3'-1"	3'-3"	3'-6"	3'-8"
L	5'-5"	7'-2"	8'-6"	9'-2"	10'-2"	10'-11"	12'-1"	12'-11"
a	0'-2 1/2"	0'-3 1/4"	0'-3 1/2"	0'-4"	0'-4 1/2"	0'-4 3/4"	0'-5"	0'-5 1/2"
b	0'-2"	0'-2 1/2"	0'-2 3/4"	0'-3"	0'-3 1/2"	0'-3 3/4"	0'-4"	0'-4 1/2"

VDOT ROAD AND BRIDGE STANDARDS		PRECAST ENDWALL FOR PIPE CULVERTS	SPECIFICATION REFERENCE
SHEET 1 OF 1 101.02	REVISION DATE	12" - 36" CIRCULAR AND 23" x 14" - 53" x 34" ELLIPTICAL PIPES VIRGINIA DEPARTMENT OF TRANSPORTATION	105 302

R-4990
HEAVY DUTY TRENCH

Materials: All frames and grates/lids are furnished standard in gray iron, meeting ASTM-A48 Class 35-B for heavy-duty use. For extra heavy-duty use or superior durability requirements, see our ductile iron Airport and Port Grating Series on page 286.

Neenah recommends project designers avoid the use of light duty trench installations because it is likely that applications will be subjected to heavy delivery vehicle traffic at some time. Furthermore, the use of a site could be changed to heavy duty use patterns at some unanticipated future date.

Dimensions in inches

Un-Bolted Catalog No.	A	B	C	Type A	Type C	Type D	Type E	Type P	Type Q
R-4990-AX	8	1 1/2	6	x	x	x	x	x	
R-4990-BX	10	1 1/2	8	x	x	x	x	x	
R-4990-CX	12	1 1/2	10	x	x	x	x	x	x
R-4990-DX	14	1 1/2	12	x	x	x	x	x	x
R-4990-EX	17	1 1/2	15	x	x	x	x	x	
R-4990-FX	20	1 1/2	18	x	x	x	x	x	
R-4990-GX	23	1 1/2	21	x	x*	x			
R-4990-HX	26	1 1/2	24	x	x*	x	x		x
R-4990-JX	30	2	27	x	x	x			
R-4990-KX	33	2	30	x	x	x*	x		
R-4990-LX	36	2	33	x	x	x*			
R-4990-MX	39	2	36	x	x*	x			
R-4990-NX	45	2	42	x	x*	x			
R-4990-OX	51	2	48	x		x*			

x - Indicates availability.
* Deep Ribs (consult shop drawing for dimensions).
Deep Ribs = "B" dimension times 2 or greater.

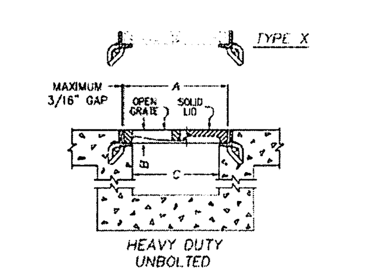

General schematic shown may not apply to all designs. Bar and rib depths, plate thicknesses and seating widths vary on different sizes and styles. If your project has design restrictions, contact your sales representative or product engineering.

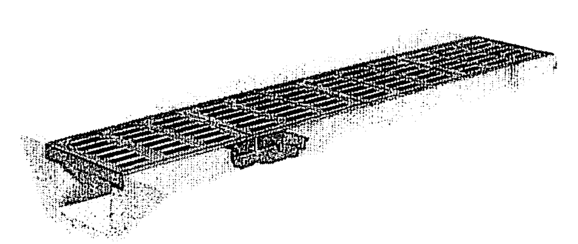

Illustrating Type C trench. Trench sections are furnished in 24" standard lengths.

Note: In Type A and P grates the slots are perpendicular to the trench run. In Type C and Q grates the slots are parallel with the trench run.

Read Carefully Before Ordering
The various standard trench drains are available with a number of alternatives. It is important to examine all of the variables carefully and specify your requirements fully. Your order will be entered correctly and promptly if it includes the following information:

- Complete catalog number
- Frame end pieces, when required
- Type of Lid or Grate: A, C, D, E, P or Q
- Length of trench sections
- Angles and intersections *
- Load requirements

*Trenches with angles, intersections, size changes or other special requirements require detail drawings prior to ordering. Contact your sales representative or product engineering for assistance.
800-558-5075

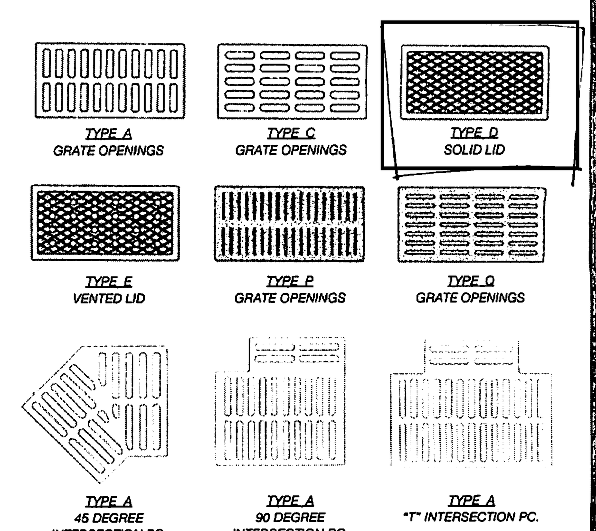

Note: 45°, 90° and "T" available in limited sizes and types.

TRENCH CASTINGS 9

282

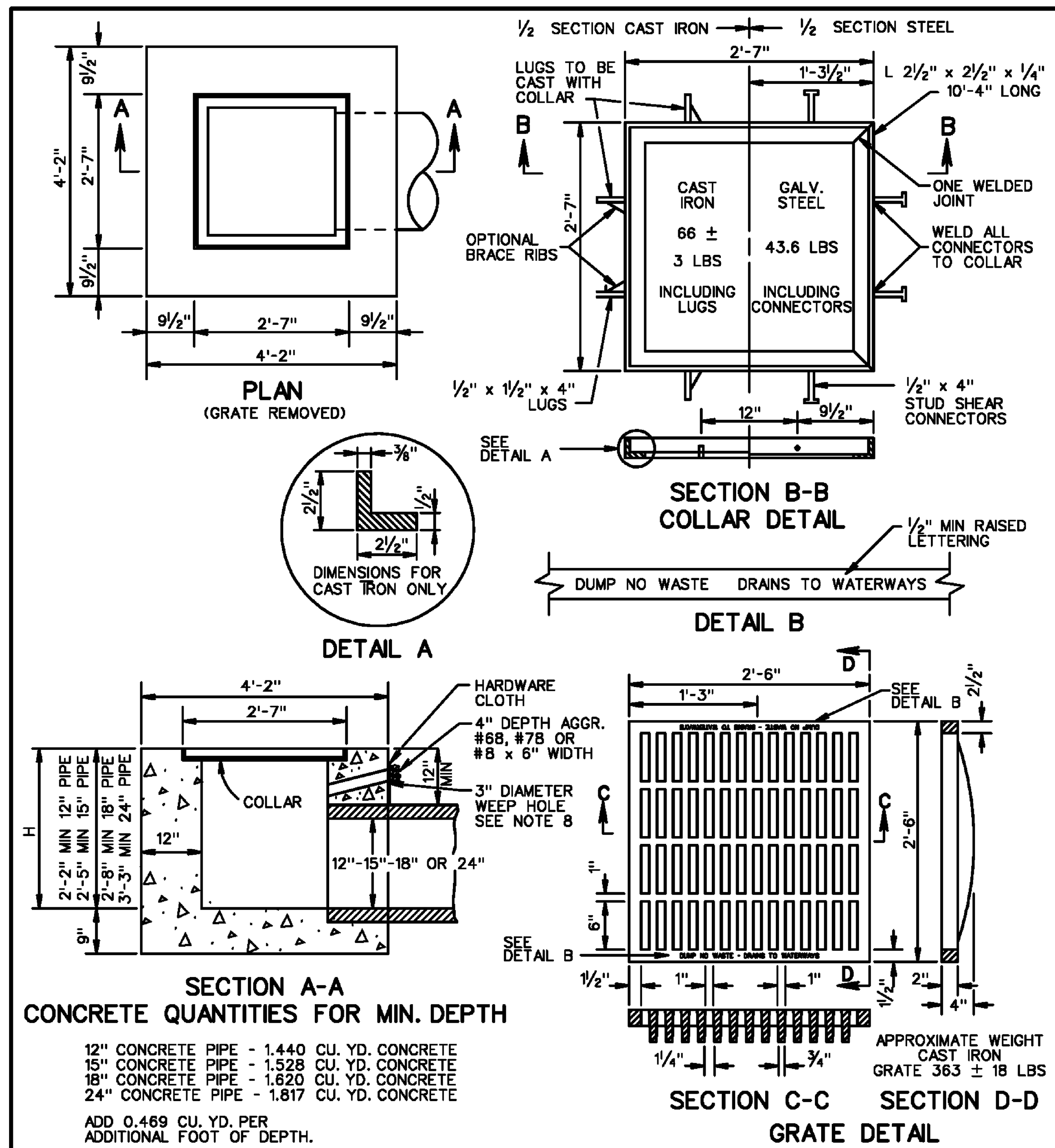

SECTION A-A
CONCRETE QUANTITIES FOR MIN. DEPTH

12" CONCRETE PIPE - 1.440 CU. YD. CONCRETE
15" CONCRETE PIPE - 1.528 CU. YD. CONCRETE
18" CONCRETE PIPE - 1.620 CU. YD. CONCRETE
24" CONCRETE PIPE - 1.817 CU. YD. CONCRETE
ADD 0.469 CU. YD. PER ADDITIONAL FOOT OF DEPTH.

NOTES

1. DEPTH OF INLET (H) TO BE SHOWN ON PLANS. FOR DEPTH GREATER THAN 10' USE STANDARD DI-1A
2. THE "H" DIMENSION SHOWN ON THE STANDARDS AND SPECIFIED ON THE PLANS WILL BE MEASURED FROM THE INVERT OF THE OUTFALL PIPE TO THE TOP OF THE STRUCTURE. PLAN "H" DIMENSIONS ARE APPROXIMATE ONLY FOR ESTIMATING PURPOSES AND THE ACTUAL DIMENSIONS SHALL BE DETERMINED BY THE CONTRACTOR FROM FIELD CONDITIONS.
3. WHEN SPECIFIED ON THE PLANS THE INVERT IS TO BE SHAPED IN ACCORDANCE WITH STANDARD IS-1. THE COST OF FURNISHING AND PLACING ALL MATERIALS INCIDENTAL TO THE SHAPING IS TO BE INCLUDED IN THE BID PRICE FOR THE STRUCTURE.
4. IN THE EVENT THE INVERT OF THE OUTFALL PIPE IS HIGHER THAN THE BOTTOM OF THE STRUCTURE, THE INVERT OF THE STRUCTURE SHALL BE SHAPED WITH CEMENT MORTAR TO PREVENT STANDING OR PONDING OF WATER IN THE STRUCTURE. THE COST OF FURNISHING AND PLACING ALL MATERIALS INCIDENTAL TO INLET SHAPING IS TO BE INCLUDED IN THE BID PRICE FOR THE STRUCTURE.
5. STEPS ARE TO BE PROVIDED WHEN H IS 4'-0" OR GREATER. FOR DETAILS SEE STANDARD ST-1.
6. THIS ITEM MAY BE PRECAST OR CAST-IN-PLACE.
7. #4 X 8" SMOOTH DOWELS AT APPROXIMATELY 12" C-C TO BE PLACED IN ALL AREAS ADJACENT TO ABUTTING CONCRETE TO PREVENT SETTLEMENT. IN LIEU OF DOWELS A 2"X4" NOTCH MAY BE PROVIDED. SEE STANDARD T-DI-3, 4 FOR ALTERNATE DESIGN.
8. 3" DIAMETER WEEP HOLE WITH 12"X12" PLASTIC HARDWARE CLOTH 1/4" MESH OR GALVANIZED STEEL WIRE, MINIMUM WIRE DIAMETER 0.03", NUMBER 4 MESH HARDWARE CLOTH ANCHORED FIRMLY TO THE OUTSIDE OF THE STRUCTURE.
9. CAST IN PLACE CONCRETE IS TO BE CLASS A3 (3000 PSI). PRECAST CONCRETE IS TO BE 4000 PSI.
10. ANY ALTERNATE METHODS OF ANCHORAGE MEETING THE APPROVAL OF THE ENGINEER MAY BE SUBSTITUTED FOR THE CAST IRON LUGS AS SHOWN HEREON.
11. DUMP NO WASTE DRAINS TO WATERWAY LETTERING IS REQUIRED ON ALL DI-1 GRATES. LOCATION OF LETTERING MAY VARY BY MANUFACTURER.

REV 8/07 104.01	MODIFIED **STANDARD DROP INLET** **12" - 24" PIPE: MAXIMUM DEPTH (H) - 10'** VIRGINIA DEPARTMENT OF TRANSPORTATION	SPECIFICATION REFERENCE 233 302

WITH SOLID MH-1 STANDARD LID

NOTE:
ALL DETAILS PROVIDED ON THIS SHEET ARE CURRENT AT TIME OF SITE PLAN PREPARATION. CONTRACTOR IS RESPONSIBLE FOR USING CURRENT DETAILS AT TIME OF CONSTRUCTION

DETAILS

FOUNDERS ROW
AT THE INTER SECTION OF WEST BROAD STREET, NORTH WEST STREET & PARK AVENUE
CITY OF FALLS CHURCH, VIRGINIA

NO.	DESCRIPTION	DATE
	GMP SET	6/21/18

WALTER L. PHILLIPS INCORPORATED ESTABLISHED 1945
Engineers • Surveyors • Planners
Landscape Architects • Arborists
207 PARK AVENUE
FALLS CHURCH, VIRGINIA 22046
(703) 532-6163 Fax (703) 533-1301
www.WLPINC.com

COMMONWEALTH OF VIRGINIA PROFESSIONAL ENGINEER KAREN L. S. WHITE Lic. No.041850 8/14/18

SCALE: NONE
DATE: SUB01 9/23/2016, SUB02 2/20/2018, GMP 6/21/2018, SUB03 7/10/2018
GMP ADDENDUM01 7/27/2018; SUB04 8/14/18
DRAWN: AI, KW, DM, BP, TT
CHECKED: KW

SHEET: C-0214

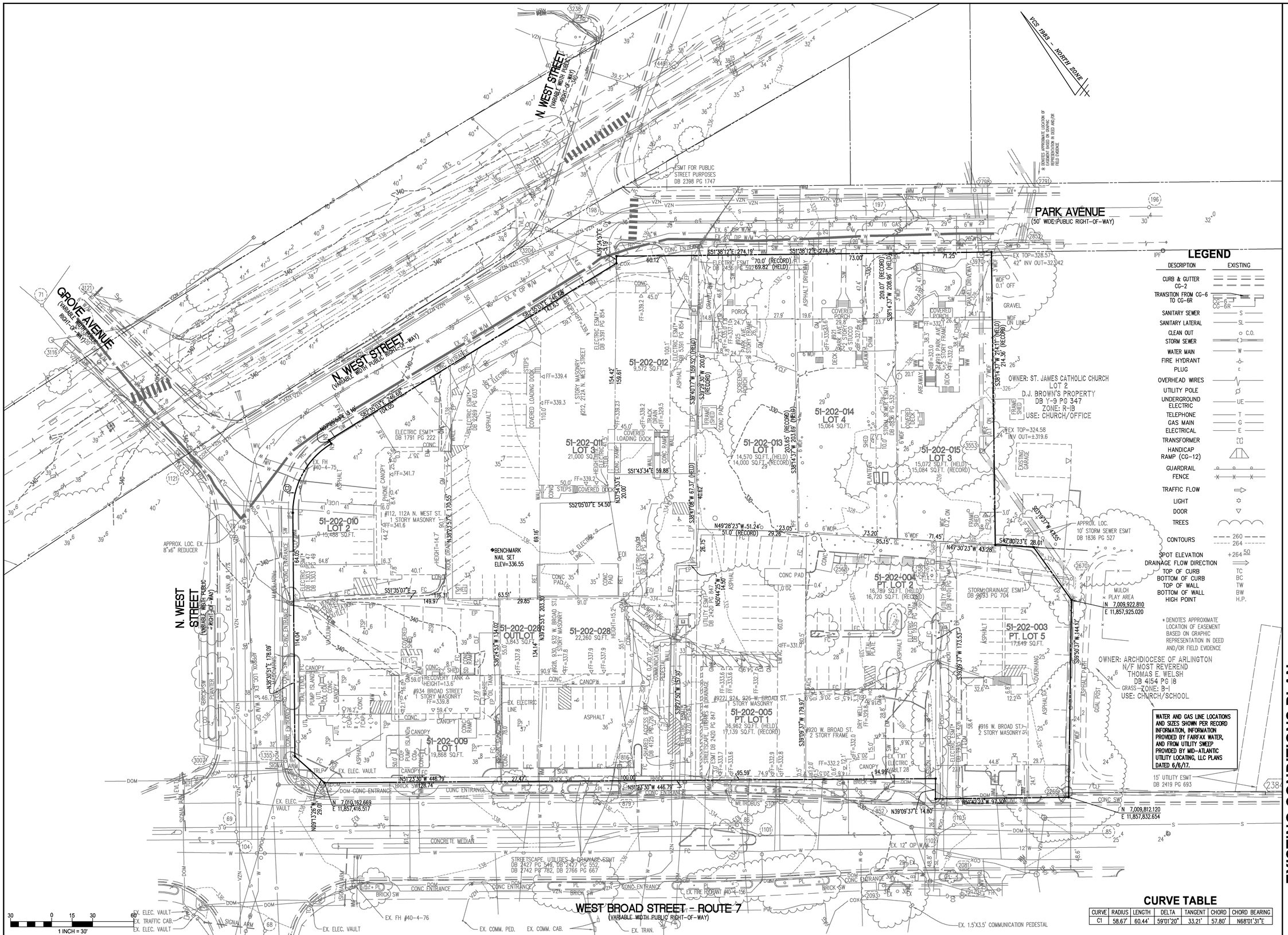

LEGEND

DESCRIPTION	EXISTING
CURB & GUTTER CG-2	
TRANSITION FROM CG-6 TO CG-6R	CG-6 CG-6R
SANITARY SEWER	S
SANITARY LATERAL	SL
CLEAN OUT	C.O.
STORM SEWER	
WATER MAIN	W
FIRE HYDRANT	
PLUG	E
OVERHEAD WIRES	
UTILITY POLE	
UNDERGROUND ELECTRIC	UE
TELEPHONE	T
GAS MAIN	G
ELECTRICAL	E
TRANSFORMER	
HANDICAP RAMP (CG-12)	
GUARDRAIL	
FENCE	
TRAFFIC FLOW	
LIGHT	
DOOR	
TREES	
CONTOURS	260 264
SPOT ELEVATION	+264 50
DRAINAGE FLOW DIRECTION	
TOP OF CURB	TC
BOTTOM OF CURB	BC
TOP OF WALL	TW
BOTTOM OF WALL	BW
HIGH POINT	H.P.

CURVE TABLE

CURVE	RADIUS	LENGTH	DELTA	TANGENT	CHORD	CHORD BEARING
C1	58.67'	60.44'	59°01'20"	33.21'	57.80'	N68°01'31"E

WALTER L. PHILLIPS INCORPORATED
ESTABLISHED 1945
Engineers • Surveyors • Planners
Landscape Architects • Arborists
207 PARK AVENUE
FALLS CHURCH, VIRGINIA 22046
(703) 532-6163 Fax (703) 533-1301
www.WLPINC.com
COMMONWEALTH OF VIRGINIA
KAREN L.S. WHITE
Lic. No.041850
8/14/18
PROFESSIONAL ENGINEER

NO.	DESCRIPTION	DATE
	GMP SET	6/21/18

DATE: SUB01 1/23/2015, SUB02 2/20/2015, GMP 8/21/2018, SUB03 7/10/2018
GMP ADDENDUM01 7/27/2018, SUB04 8/14/18
SCALE: 1" = 30'
DRAWN: AL KW, DM, BP, JT
CHECKED: KW

EXISTING CONDITIONS PLAN

FOUNDERS ROW

AT THE INTER SECTION OF WEST BROAD STREET, NORTH WEST STREET & PARK AVENUE
CITY OF FALLS CHURCH, VIRGINIA

SHEET: C-0301

File No. CC-8 Tax Map No. 40-4 Job No. 07-023 Cadd Dwg. File: Q:\sdskproj\07023\dwg\Engineering\Site Plan\07023C-0301.dwg
Xref: DIR\Q:\sdskproj\07023\dwg\Engineering\Site Plan\07023B-0001

CITY OF FALLS CHURCH Board of Zoning Appeals

RESOLUTION # 1 October 13, 2016

Falls Church
Board of Zoning Appeals
Application V1585-16

WHEREAS, Peter Batten and David Lasso appeared before the Board of Zoning Appeals, was duly sworn, and made application for a variance described as follows:

Variance application V1585-16 by Mason Row Apartments, LLC., Developer, for a variance to Section 48-1101 (10) to allow a side yard setback of ten (10) feet instead of 20 feet on that portion of the site identified as 919 Park Avenue, RPC #51-202-015 of the Falls Church Real Property Records, zoned B-1, Limited Business, for the purpose of constructing a new mixed-use development known as Mason Row.

WHEREAS, Mr. Lasso testified that the original theater layout ('box') approved as part of the Conceptual Development Plan (CDP) through the Rezoning and Special Exceptions approvals is not big enough to accommodate the theater tenant; and

WHEREAS, Mr. Lasso stated that in order to provide the necessary space for the theater, the 'box' would need to be increased in size by expanding 10 feet into the required setback in the form of a cantilever; and

WHEREAS, Mr. Lasso stated that while the requirement for a 20 foot setback is caused by the current residential zoning designation of the abutting St. James property, the current and planned use of that property, which is institution should be considered; and

WHEREAS, The Board stated that the variance requested involves an unusual circumstance where the business district is abutting a non-residential use that is zoned residential, a condition that has existed for many years; and

WHEREAS, The Board felt that applying the setback that is intended to protect residential uses from commercial uses is an unreasonable restriction on the utilization of the property, because the adjacent property is used and planned institution; and

WHEREAS, Thus, the board stated, granting of this variance will not present a substantial detriment to the adjacent property.

NOW THEREFORE BE IT RESOLVED that the Board of Zoning Appeals for the City of Falls Church **approves** *Variance application V1585-16 by Mason Row Apartments, LLC., Developer, for a variance to Section 48-1101 (10) to allow a side yard setback of ten (10) feet instead of 20 feet on that portion of the site identified as 919 Park Avenue, RPC #51-202-015 of the Falls Church Real Property Records, zoned B-1, Limited Business, for the purpose of constructing a new mixed-use development known as Mason Row,* subject to the following conditions and restrictions:

1. The Applicant shall work with staff, Architectural Advisory Board (AAB), and Planning Commission during the site plan process to specifically review and finalize the building and related architectural treatments and planned mural art design elements for the eastern elevations adjacent to the R-1B zoned, Medium Density Residential property owned by St. James Church. These building and architectural elevations, and particularly the proposed façade mural art shall be subject to review and recommendation by the AAB to the Planning Commission. Subsequent review and approval by the Planning Commission shall be required, in support of the requested variance and provision of building design and façade features to mitigate potential visual impacts and provide for appropriate community architecture and art. This variance condition is related to the *Voluntary Concessions, Community Benefit, Terms and Conditions,* dated January 11, 2016 for Mason Row and Item 19 *Public Art and Art Space*. The Owner also agrees to provide art on Option A for treatment of the East Façade, as shown on drawing A.2.I.a. dated December 9, 2015.
2. The Applicant shall provide at the site plan review further detailed landscaping plans for the twenty foot buffer area and revised lighting to reflect the requested ten (10) foot projection to specifically address shading and other impacts.
3. The building expansion sought by the variance is to be used and operated as theater space and for no other use unless authorized by an amendment by the City Council to the Special Exception and its accompanying Voluntary Concessions, Community Benefits, Terms and Conditions.
4. The variance shall become lapse and void if substantial construction has not started within one year of variance issuance, and the Zoning Administrator may, pursuant to Sec. 48-172(7)c of the Zoning Ordinance, upon written application by the grantee, authorize one extension, for a period not to exceed 12 months.

Moved: Mr. Krasner
Second: Mr. Jones

VOTE:

Mr. Williamson	YES
Mr. Krasner	YES
Mr. Jones	YES
Mr. Calabrese	ABSENT

CITY OF FALLS CHURCH

November 30, 2017

Joe Muffler
Vice President
Mill Creek Residential Trust

Re: Extension of variance V1585-16

Dear Mr. Muffler,

I am in receipt of your request for a 1-year extension of variance V1585-16, as provided for in Chapter 48 Zoning and in the approved resolution.

This letter will serve as the approval of that request, and the revised date for satisfying the conditions of the variance is now **November 2018**.

If you have any questions, feel free to contact me.

Sincerely,

John C. Boyle
Zoning Administrator
Zoning Department Director
City of Falls Church
703.248.5126 phone
jboyle@fallschurchva.gov

Cc: James Snyder, Director
Akida Rouzi, Senior Planner, Deputy Zoning Administrator

Harry E. Wells Building • 300 Park Avenue • Falls Church, Virginia 22046 •

CITY OF FALLS CHURCH Board of Zoning Appeals

DRAFT

RESOLUTION # 2 July 17, 2014

Falls Church
Board of Zoning Appeals
Application A1561-14

WHEREAS, Peter Batten of Spectrum Development and David Lasso, attorney, appeared before the Board of Zoning Appeals, were duly sworn, and made application for an appeal described as follows:

Appeal application A1561-14 by Spectrum Development, LLC c/o Richard P. Buskell, appealing a determination by the Zoning Administrator that a new permit from the Historic Architectural Review Board (H.A.R.B.) is required to demolish the historic structure on premises known as 920 W Broad St, RPC# 51-202-004 of the Falls Church Real Property Records, zoned B-1, limited business, said property owned by Pajelah Nabilah et al.;

WHEREAS, Testimony was presented that a permit to demolish the structure was granted by the HARB to the property owner in 1992; and

WHEREAS, Examples were provided of other historic structures for which demolition permits approved by the HARB were issued and not immediately acted upon and the structures were subsequently allowed to be demolished without additional HARB approval; and

WHEREAS, Repairs and alterations to the structure done after approval to demolish was granted do not void the permit; and

WHEREAS, The Board finds that permission to demolish an historic structure runs with the land;

NOW THEREFORE BE IT RESOLVED that the Board of Zoning Appeals for the City of Falls Church sustains the appeal and reverses the determination of the zoning administrator.

VOTE:

Mr. Williamson	YES
Mr. Krasner	YES
Mr. Calabrese	NO
Mr. Howell	YES

SANITARY AS-BUILT DATA

SMH 70	
MANHOLE TOP =	340.45
8"INV IN (SMH 1121)=	331.75
8"INV OUT (SMH 69)=	331.60
SMH 69	
MANHOLE TOP =	337.53
8"INV IN (SMH 70)=	327.93
8"INV IN (N.WEST)=	326.15
8"INV OUT (SMH 86)=	326.10
10"INV OUT (SMH 104)=	326.05
SMH 104	
MANHOLE TOP =	337.55
8"INV IN (SMH 87)=	326.00
10"INV IN (SMH 69)=	325.90
10"INV OUT (SMH 68)=	325.80
SMH 68	
MANHOLE TOP =	335.83
10"INV IN (SMH 104)=	324.23
10"INV OUT (SMH 67)=	323.98
SMH 67	
MANHOLE TOP =	325.86
10"INV IN (SMH 68)=	315.86
8"INV IN (N.WEST)=	315.81
10"INV OUT (SMH 66)=	315.56
SMH 66	
MANHOLE TOP =	326.55
8"INV IN (N.EAST)=	311.50
8"INV IN (SMH 287)=	311.10
10"INV IN (SMH 67)=	310.85
10"INV OUT (SMH 65)=	310.75
SMH 65	
MANHOLE TOP =	317.78
10"INV IN (SMH 66)=	309.51
10"INV OUT (SMH 64)=	309.48
10"INV OUT (SMH 144)=	309.33
SMH 144	
MANHOLE TOP =	316.10
10"INV IN (SMH 65)=	307.30
10"INV OUT (SMH 388)=	307.00

SMH 86	
MANHOLE TOP =	333.90
8"INV IN (S.WEST)=	325.15
8"INV IN (SMH 69)=	324.90
8"INV OUT (SMH 1101)=	324.80
SMH 1101	
MANHOLE TOP =	333.50
8"INV IN (SMH 86)=	324.50
8"INV OUT (SMH 1102)=	324.25
SMH 1102	
MANHOLE TOP =	328.81
LATERAL IN (S.WEST)=	321.71
8"INV IN (SMH 1101)=	320.77
8"INV OUT (SMH 1103)=	320.54
SMH 1103	
MANHOLE TOP =	328.39
8"INV IN (SMH 1102)=	320.19
8"INV OUT (SMH 85)=	320.15
SMH 85	
MANHOLE TOP =	325.03
8"INV IN (SMH 1102)=	316.73
8"INV OUT (SMH 25)=	315.69
SMH 25	
MANHOLE TOP =	324.92
8"INV IN (SMH 26)=	318.82
DROP INVERT =	314.47
8"INV IN (SMH 195)=	316.14
8"INV IN (SMH 85)=	314.32
8"INV OUT (SMH 24)=	314.29

SMH 198	
MANHOLE TOP =	337.17
8"INV IN (NORTH)=	331.82
8"INV OUT (SMH 197)=	329.92
SMH 197	
MANHOLE TOP =	330.79
8"INV IN (SMH 198)=	323.56
8"INV OUT (SMH 196)=	323.54
SMH 196	
MANHOLE TOP =	330.39
8"INV IN (SMH 197)=	322.69
8"INV OUT (SMH 26)=	322.68
SMH 26	
MANHOLE TOP =	333.44
8"INV IN (SMH 27)=	321.34
8"INV IN (SMH 196)=	321.04
8"INV OUT (SMH 25)=	320.94
SMH 719	
MANHOLE TOP =	335.14
4"INV IN (NORTH)=	331.96
4"INV IN (X2) (NORTH)=	331.98
4"INV OUT (WEST)=	331.94

LEGEND

PROPOSED	DESCRIPTION	EXISTING
EP	EDGE OF PAVEMENT	EP.
MH	MANHOLE	MH
WV	WATER VALVE	WV
WM	WATER METER	WM
GM	GAS METER	GM
TCB	TRAFFIC CONTROL BOX	TCB
LP	LIGHT POLE	LP
LP/S	LIGHT POLE WITH SIGNALS	LP/S
	CURB & GUTTER CG-2	
CG-6R CG-6	TRANSITION FROM CG-6 TO CG-6R	CG-6 CG-6R
	SANITARY SEWER	S
SL	SANITARY LATERAL	SL
● C.O.	CLEAN OUT	○ C.O.
	STORM SEWER	
	WATER MAIN	W
	FIRE HYDRANT	
	PLUG	
	OVERHEAD WIRES	
	UTILITY POLE	
UE	UNDERGROUND ELECTRIC	UE
T	TELEPHONE	T
G	GAS MAIN	G
E	ELECTRICAL	E
T	TRANSFORMER	T
	HANDICAP RAMP (CG-12)	
	GUARDRAIL	
	FENCE	
	TRAFFIC FLOW	
	LIGHT	
	DOOR	
	TREES	
260 264	CONTOURS	260 264
+264[50]	SPOT ELEVATION	+264[50]
	DRAINAGE FLOW DIRECTION	
TC	TOP OF CURB	TC
BC	BOTTOM OF CURB	BC
TW	TOP OF WALL	TW
BW	BOTTOM OF WALL	BW
HP	HIGH POINT	H.P.
	LIMITS OF CLEARING AND GRADING	
	TEST PIT	

STORM AS-BUILT DATA

SD 1338	
CURB INLET TOP =	338.40
15"RCP OUT (SD 1355)=	334.60
SD 1355	
CURB INLET TOP =	337.14
15"RCP IN (SD 1338)=	333.02
15"RCP OUT (SD 1476)=	332.44
SD 1476	
CURB INLET TOP =	337.37
15"RCP IN (SD 1355)=	331.87
18"RCP OUT (SD 3007)=	331.67
SD 3007	
CURB INLET TOP =	337.37
15"RCP IN (SD 1476)=	332.05
18"RCP OUT (WEST)=	331.85
SD 816	
CURB INLET GRATE TOP =	335.75
15"RCP OUT (SD 879)=	333.45
SD 879	
CURB INLET TOP =	335.61
15"RCP IN (SD 816)=	332.31
15"RCP OUT (SD 852)=	330.94
SD 852	
CURB INLET TOP =	329.85
15"RCP IN (SD 879)=	325.45
15"RCP OUT (SD 2384)=	325.30

SD 2798	
CURB INLET TOP =	329.26
35"x24"CMP IN (NORTH)=	324.81
35"x24"CMP OUT (SD 3970)=	324.66
SD 2791	
CURB INLET TOP	328.83
10"CMP IN (NORTH)=	326.63
36"RCP IN (N.WEST)=	324.75
24"RCP OUT (SD 2852)=	324.63
24"RCP OUT (SD 2852)=	324.65
SD 2852	
CURB INLET TOP =	328.37
24"RCP IN (SD 2791)=	324.42
24"RCP IN (SD 2791)=	324.52
36"RCP OUT (SD 3970)=	324.27
SD 3970	
MANHOLE TOP =	328.57
35"x24"CMP IN (SD 2798)=	324.32
36"RCP IN (SD 2852)=	324.07
42"RCP OUT (SD 3553)=	323.42
SD 3553	
GRATE INLET TOP =	324.58
APPROXIMATELY 5' DEEP	
INVERTS INACCESSIBLE	
SD 2670	
GRATE INLET TOP =	323.74
15"RCP IN (SD 2558)=	320.20
42"CMP IN (SD 3553)=	318.96
42"RCP OUT (SD 2266)=	318.78

SD 2266	
MANHOLE TOP =	325.52
15"RCP IN (SD 852)=	317.99
42"RCP IN (SD 2670)=	318.24
42"RCP OUT (SD 2384)=	318.04
STANDING WATER IN STRUCTURE	
SD 2384	
MANHOLE TOP =	323.27
42"RCP IN (SD 2266)=	317.53
60"x36"CMP OUT (S.WEST)=	316.88
SD 2568	
STORM VAULT TOP =	328.97
CENTERLINE 60"CMP =	321.25
SD 2558	
STORM VAULT TOP =	325.53
INVERTS INACCESSIBLE	
SD 3204	
CURB INLET TOP =	338.02
10"RCP OUT (NORTH)=	336.52
SD 3116	
CURB INLET TOP =	342.04
18"RCP OUT (WEST)=	339.24
SD 4491	
YARD INLET TOP =	338.01
18"RCP IN (WEST)=	334.71
18"CMP OUT (EAST)=	334.36
SD 3238	
CURB INLET TOP =	339.29
15"RCP OUT (N.EAST)=	333.94

WALTER L. PHILLIPS INCORPORATED ESTABLISHED 1945
Engineers • Surveyors • Planners
Landscape Architects • Arborists
207 PARK AVENUE
FALLS CHURCH, VIRGINIA 22046
(703) 532-6163 Fax (703) 533-1301
www.WLPINC.com

SCALE: 1" = 30'

DATE: SUB01 9/23/2016, SUB02 2/20/2018, GMP 6/21/2018, SUB03 7/10/2018
GMP ADDENDUM01 7/27/2018; SUB04 8/14/18

DRAWN: AI, KW, DM, BP, TT

CHECKED: KW

COMMONWEALTH OF VIRGINIA
KAREN L. S. WHITE
Lic. No.041850
8/14/18
PROFESSIONAL ENGINEER

NO.	DESCRIPTION	DATE
	GMP SET	6/21/18

EXISTING CONDITIONS NOTES

FOUNDERS ROW

AT THE INTER SECTION OF WEST BROAD STREET, NORTH WEST STREET & PARK AVENUE
CITY OF FALLS CHURCH, VIRGINIA

SHEET: C-0302

DEMOLITION NOTES

1. SEE SHEET C-0302 FOR FULL LEGEND.
2. DEMOLITION SHOWN ON THIS PLAN TO COINCIDE WITH EROSION AND SEDIMENT CONTROL PHASE 1 (SHEET C-0601).
3. SEE TREE PRESERVATION PLAN ON SHEET C-1201 FOR TREE REMOVAL INFORMATION.
4. SEE CONSTRUCTION NOTES ON SHEET C-0201.
5. CONTRACTOR TO MILL AND OVERLAY DAMAGED ASPHALT THAT IS CALLED OUT TO REMAIN, IF DAMAGED DURING CONSTRUCTION.
6. EXISTING PAVEMENT MARKINGS TO BE ERADICATED WITHIN THE SITE UNLESS OTHERWISE SPECIFIED ON THIS PLAN.
7. DISCONNECTION OF UTILITIES SERVING THE EXISTING BUILDINGS SHALL BE COORDINATED WITH THE OWNERS/TENANTS. CONTRACTOR TO COORDINATE WITH UTILITY PROVIDERS IF SERVICE LINES REQUIRE REMOVAL OR RELOCATION. DISRUPTIONS ARE NOT PERMITTED UNLESS AUTHORIZED BY OWNER.
8. SEE DRY UTILITY PLAN (SHEET C-1401) FOR REMOVAL OF DRY UTILITIES.

DEMOLITION LEGEND

- EX. PAVEMENT TO BE REMOVED
- EX. BUILDINGS TO BE DEMOLISHED
- (TBR) TO BE REMOVED
- LIMITS OF DISTURBANCE

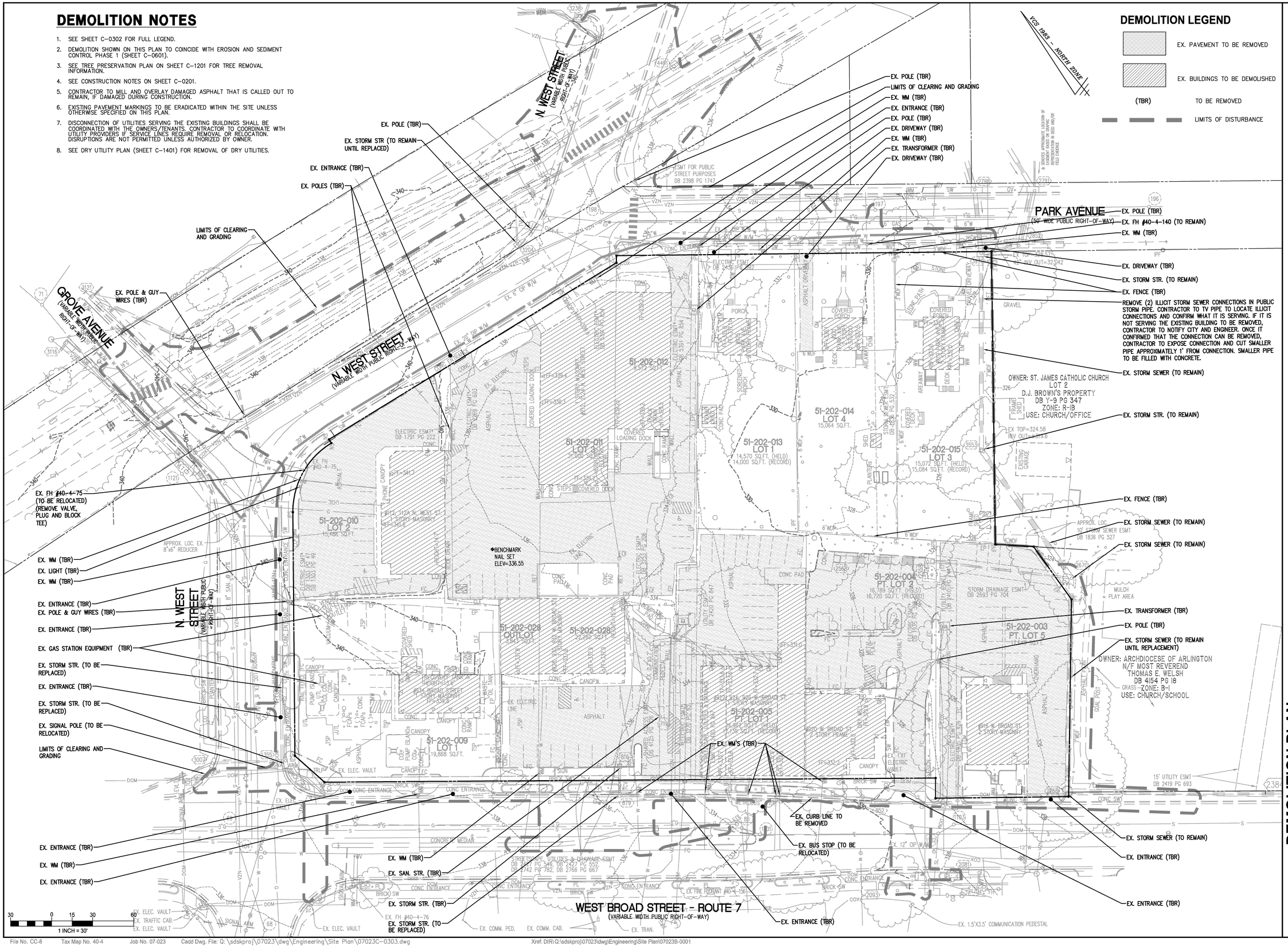

File No. CC-8 Tax Map No. 40-4 Job No. 07-023 Cadd Dwg. File: Q:\sdskproj\07023\dwg\Engineering\Site Plan\07023C-0303.dwg Xref: DIR\Q:\sdskproj\07023\dwg\Engineering\Site Plan\07023B-0001

WALTER L. PHILLIPS INCORPORATED ESTABLISHED 1945
Engineers • Surveyors • Planners
Landscape Architects • Arborists
207 PARK AVENUE
FALLS CHURCH, VIRGINIA 22046
(703) 532-6163 Fax (703) 533-1301
www.WLPINC.com

COMMONWEALTH OF VIRGINIA PROFESSIONAL ENGINEER
KAREN L. S. WHITE
Lic. No.041850
8/14/18

DRAWN: AL KW, DM, BP, TT | CHECKED: KW

DATE: SUB01 1/23/2015, SUB02 2/20/2014, GMP 8/21/2018, SUB03 7/10/2018
GMP ADDENDUM01 7/27/2018, SUB04 8/14/18
SCALE: 1" = 30'

NO.	DESCRIPTION	DATE
	GMP SET	8/21/18

DEMOLITION PLAN

FOUNDERS ROW

AT THE INTER SECTION OF WEST BROAD STREET, NORTH WEST STREET & PARK AVENUE
CITY OF FALLS CHURCH, VIRGINIA

SHEET: C-0303