PUBLIC WORKS NOTES:

1. All requirements relative to City Code and Public Works Design and Construction Standards shall be submitted and approved before release of site plans.
2. All required bonds, escrows, insurances, cash, etc., shall be submitted and approved before release of site plans.
3. Plan and profile shall be submitted (inked on mylar size 24" x 36") for all storm sewers and street projects in public right-of-ways or public easements and approved before release of site plans.
4. Contractor is responsible to notify all utility companies before construction begins.
5. All datum shall be based on USC and GS datum.
6. Bonds shall not be released until the receipt and approval by the City of as-built site plan, plans and profiles, etc.
7. All underground utilities and transformers shall be shown on site plan and confirmed per location on as-built plan.
8. The owner shall notify the Director of Public Works in Writing three days prior to the beginning of all street or storm sewer work shown on the site plan.
9. The installation of improvements as required in this article shall in no case serve to bind the city to accept such improvements for the maintenance, repair of operation thereof, but such acceptance, shall be subject to the existing regulations concerning the acceptance of each type of improvement.
10. No lane closures are permitted on West Broad Street before 9:30 AM and after 3:00 PM. Only one lane may be closed at a time. VDOT requirements for traffic control will govern.
11. Normal construction hours are 7:00 AM to 9:00 PM Monday, through Friday and 9:00 AM to 9:00 PM on weekends and holidays.
12. Permits are required for construction work located within the established City right-of-way.

SITE PLAN SHEET INDEX

C-0101 COVER SHEET
C-0201 NOTES AND ZONING TABULATIONS
C-0202 VOLUNTARY CONCESSIONS
C-0203 VOLUNTARY CONCESSIONS
C-0204 APPROVED SPECIAL EXCEPTION CONCERPTUAL DEVELOPMENT PLAN
C-0205 DETAILS
C-0206 DETAILS
C-0207 DETAILS
C-0208 TRANSPORTATION AND PARKING MANAGEMENT PLAN
C-0301 EXISTING CONDITIONS PLAN
C-0302 DEMOLITION PLAN
C-0303 PRELIMINARY SUBDIVISION PLAT
C-0401 LAYOUT PLAN
C-0402 WEST BROAD ST. ALTERNATIVE BUS STOP DESIGN
C-0501 GRADING PLAN
C-0601 EROSION & SEDIMENT CONTROL PLAN - PHASE 1
C-0602 EROSION AND SEDIMENT CONTROL PLAN - PHASE 2
C-0603 EROSION & SEDIMENT CONTROL NARRITIVES AND DETAILS
C-0701 DRAINAGE DIVIDES
C-0702 STORMWATER MANAGEMENT AND BMP CALCULATIONS
C-0703 STORMWATER MANAGEMENT DETAILS
C-0704 BEST MANAGEMENT PRACTICES DETAILS
C-0801 STORM SEWER PROFILES
C-0802 STORM DETAILS
C-0901 UTITLITY PROFILES
C-1101 CONSTRUCTION MANAGEMENT PLAN
C-1102 MEDIC UNIT AUTOTURN
C-1201 TREE INVENTORY & PRESERVATION PLAN
C-1202 TREE PRESERVATION NOTES AND DETAILS
C-1203 LANDSCAPE PLAN
C-1204 PLANTING NOTES AND DETAILS
C-1205 CITY OF FALLS CHURCH STREETSCAPE DETAILS
C-1206 SITE FIXTURES DETAILS
C-1207 STREETSCAPE PLANTER IRRIGATION DETAILS
C-1208 STREETSCAPE PLANTER IRRIGATION DETAILS
E1.0 PHOTOMETRIC PLAN
E1.1 PHOTOMETRIC PLAN
A4.0.1 ARCHITECTURAL ELEVATIONS
A4.0.2 ARCHITECTURAL ELEVATIONS

FIRE MARSHAL NOTES:

All requirements relative to City Fire Code and Virginia Building Code must be complied with.

1. Use group classification B
2. Type of construction I 2
3. Fire flow @ hydrant. Q20 = 2700 GPM

NOTE: NFPA-13 SPRINKLER PACKAGE PROPOSED

PUBLIC UTILITIES NOTES:

FAIRFAX WATER
WATER MAIN CONSTRUCTION NOTES

1. ALL WATER MAIN CONSTRUCTION, TESTING AND SAMPLING SHALL COMPLY WITH THE REQUIREMENTS AND SPECIFICATIONS OF FAIRFAX WATER'S CONSTRUCTION PRACTICE MANUAL AND THE REQUIREMENTS OF THE FAIRFAX COUNTY PUBLIC FACILITIES MANUAL. ALL WATER MAIN, FITTINGS AND APPURTENANCES SHALL COMPLY WITH FAIRFAX WATER'S "APPROVED PRODUCTS LIST". THE CONSTRUCTION PRACTICE MANUAL AND APPROVED PRODUCTS LIST MAY BE FOUND ON THE FW WEBSITE AT WWW.FAIRFAXWATER.ORG.
2. THE DEVELOPER SHALL REQUEST INSPECTION BY FAIRFAX WATER THREE DAYS PRIOR TO COMMENCING CONSTRUCTION OF THE WATER MAIN (PHONE NUMBER 703-289-6388 OR 6389).
3. NO WATER MAIN CONSTRUCTION IS PERMITTED OR VALVES OPERATED WITHOUT PRIOR NOTIFICATION OF FAIRFAX WATER (PHONE NUMBER 703-289-6388 OR 6389).
4. MAXIMUM WORKING PRESSURE SHALL BE 70 PSI.
5. THE DEVELOPER WILL BE RESPONSIBLE FOR ANY RELOCATION OR REMOVAL OF WATER MAINS AND APPURTENANCES DUE TO THE DEVELOPMENT OF THIS PROPERTY. SERVICE LINES WHICH WILL NO LONGER BE USED SHALL BE REMOVED AND DISCONNECTED AT THE WATER MAIN BY THE DEVELOPER, AND THE CORPORATION STOP SHUT-OFF AND CAPPED, OR REMOVED AND PLUGGED (WITH A TAPERED PLUG) AS DIRECTED BY THE FAIRFAX WATER INSPECTOR. THE DEVELOPER MAY ALSO BE REQUIRED TO USE ADDITIONAL PIPE RESTRAINT OR ALTERNATIVE CONSTRUCTION METHODS NOT SHOWN ON THE PLANS IF FIELD CONDITIONS WARRANT, AS DETERMINED BY THE FAIRFAX WATER INSPECTOR.
6. ALL NEW AND EXISTING VALVE BOXES MUST BE FULLY ADJUSTED TO CONFORM TO THE FINAL ASPHALT GRADE. NO PAVING ADJUSTERS WILL BE PERMITTED.
7. ALL NEW D.I.P. WATER MAIN SHALL BE WRAPPED WITH 4 MILLIMETER CROSS-LAMINATED POLYETHYLENE ENCASEMENT (SINGLE WRAPPED – LESS THAN 24", DOUBLE WRAPPED – 24" AND LARGER). THERE SHALL BE A 6 INCH ENVELOPE OF 21A SELECT FILL FOR ALL POLYETHYLENE WRAPPED WATER MAIN. SEE THE TRENCH DETAILS ON THE CURRENT VERSION OF FW STANDARD DETAILS. THESE DETAILS MAY BE FOUND ON THE FW WEBSITE AT WWW.FAIRFAXWATER.ORG.
8. WHEN CONNECTING TO AN EXISTING WATER MAIN, CONTRACTOR MUST EXCAVATE AND EXPOSE NEAREST VALVE IN THE PRESENCE OF A FAIRFAX WATER INSPECTOR IN ORDER TO DETERMINE THE CONDITION OF ITS RESTRAINT. IF FW INSPECTOR DEEMS IT NECESSARY, CONTRACTOR MUST RESTRAIN THE VALVE OR REPLACE THE RESTRAINT SYSTEM.
9. DURING WET TAP INSTALLATIONS THE CONTRACTOR SHALL SAVE AND TAG THE COUPON CLEARLY SHOWING THE DATE, LOCATION, DIAMETER AND PIPE MATERIAL. THE TAGGED COUPON SHALL BE GIVEN TO FAIRFAX WATER'S INSPECTOR FOR FURTHER PROCESSING. IF ANY PIPE IS TO BE ABANDONED, PRIOR TO CAPPING THE MAIN, A SMALL SECTION OF PIPE SHALL BE REMOVED, TAGGED AS DESCRIBED ABOVE AND GIVEN TO THE FAIRFAX WATER INSPECTOR.
10. FIRE LINES SHALL BE PRIVATELY OWNED AND MAINTAINED BY THE PROPERTY OWNER. FAIRFAX WATER'S OWNERSHIP AND MAINTENANCE RESPONSIBILITY INCLUDES AND STOPS AT THE BRANCH VALVE AT FAIRFAX WATER'S MAIN IN THE RIGHT-OF-WAY OR EASEMENT.
11. USE Q20 = 2700 GPM

PLANNING NOTES:

SPECIAL EXCEPTION:

A SPECIAL EXCEPTION FOR AN INCREASE OF BUILDING HEIGHT TO 73' FEET WAS APPROVED FOR THE PROPOSED BUILDING.

FOR PURPOSES OF DETERMINING BUILDING HEIGHT, PARAPETS ARE NOT COUNTED TOWARDS BUILDING HEIGHT.

ARBORIST NOTES:

RPI MAP INFORMATION:

RPC 51-131-003 AND 51-131-005

Lot(s) 3, 4, 5 / 5,6 **Block** A - WOODLAND SUBDIVISION / C - SHERWOOD SUBDIVISION

MISCELLANEOUS NOTES:

1. Upon satisfactory completion of the installation of required improvements, as shown on the approved site plan or a section thereof, the developer shall submit to the Department of Planning five copies of an as-built site plan certified by the engineer, architect and/or surveyor for approval for conformity with the approved site plan.
2. The As-Built Site Plan shall be submitted and approved prior to the issuance of the final Occupancy Permit.
3. Final approval by the Planning Commission of this site plan shall expire one year after the day of such approval if building permits have not been obtained for construction in accordance therewith, unless an extension is granted by the City.
4. In any development involving a condominium, cooperative, automatic owners' association or other form of ownership in which there is common area within the development, the documents pertaining to this form of ownership shall be approved by the City Attorney prior to issuance of any Occupancy Permit.
5. Any proposed changes or revisions during the execution of or subsequent to implementation of the approved site plan shall be subject to City review and approval.
6. The federal emergency management agency's flood insurance rate map for the City of Falls Church, Virginia, map number 5100540001c, revised date July 16, 2004, designates the property as being in zone x, "Areas determined to be outside the 0.2% annual chance floodplain."

WAIVERS:

SECTION 48-1181 (2)a. OF THE CITY CODE. PERIMETER PARKING LOT LANDSCAPING ADJACENT TO ABUTTING PROPERTIES NON-RESIDENTIALLY ZONED. (A SOLID LANDSCAPED PLANTING STRIP THAT IS AT LEAST 3½ FEET IN HEIGHT AND AT LEAST TEN FEET IN WIDTH SHALL BE PROVIDED. THIS STRIP SHALL CONTAIN A MINIMUM OF 25 SMALL SHRUBS AND FOUR CANOPY TREES PER 100 LINEAR FEET. SEE TABLE 4 IN SECTION 48-1185 FOR MINIMUM VEGETATION SIZE REQUIREMENTS.) TO REDUCE THE REQUIRED PERIMETER PARKING LOT LANDSCAPE PLANTING STRIPS ADJACENT TO ABUTTING RESIDENTIAL ZONED PROPERTIES BY THE FOLLOWING:

NORTHEAST BOUNDARY – (±106 L.F.) PLANTING STRIP WIDTH REDUCED FROM 10' TO 5' IN WIDTH AND REQUIRED VEGETATION DENSITY OF BUFFER B TO THAT SHOWN ON THE LANDSCAPE PLAN.

NORTHWEST BOUNDARY – (±105 L.F.) PLANTING STRIP WIDTH REDUCED FROM 10' TO 6' IN WIDTH AND REQUIRED VEGETATION DENSITY OF BUFFER B TO THAT SHOWN ON THE LANDSCAPE PLAN.

VARIANCE:

NONE

MISCELLANEOUS NOTES:

Easement(s):

1. PUBLIC SIDEWALK EASEMENT ALONG W. BROAD ST. (EASEMENT WIDTH = 4.2').
2. PUBLIC SIDEWALK EASEMENT ALONG N. LEE ST. (EASEMENT WIDTH = 1.56')

Subdvision(s) and Consolidation(s):

CONSOLIDATION OF PARCEL 51-131-003 AND 51-131-005.

Dedication(s):

N/A

Site Plan Approval:

SITE PLAN APPROVAL IS DEFINED AS APPROVAL OF THE SITE PLAN FOR THE SUBJECT PROJECT BY THE PLANNING COMMISSION. DEVELOPER SHALL APPLY WITHIN 90 DAYS OF THAT SITE PLAN APPROVAL FOR THE ASSOCIATED ADMINISTRATIVE STAFF APPROVALS AND RELATED BONDS USING GOOD FAITH EFFORTS TO COMPLETE THESE APPROVALS IN A TIMELY MANNER. THERE MAY BE CONSIDERATION OF ONE EXTENSION OF 3 MONTHS FOR THE ABOVE TIMEFRAME AT THE DISCRETION OF THE PLANNING DIRECTOR/GENERAL MANAGER OF THE DEPARTMENT OF DEVELOPMENT SERVICES (DDS).

APPROVALS

PLANNING COMMISSION FINAL APPROVAL:

SPECIAL USE PERMIT (Date(s) of Approval by BZA):

BOND(S) POSTED (Date(s) and Amount(s)):

FINAL STAFF APPROVAL:

	Signature :	Date :
Planning		
Public Works		
Public Utilities		

SUBSEQUENT ACTIONS:

BUILDING PERMIT ISSUED (Date) : _____

AS-BUILT APPROVED (Date) : _____

COMMON AREA DOCUMENTS APPROVED (Date) : _____

LANDSCAPE ESCROW ACCEPTED (Date) : _____

CERTIFICATE OF OCCUPANCY (Date) : _____

OTHER :

Revisions Approved prior to Certificate of Occupancy:

Description	Date Approved

THE KENSINGTON OF FALLS CHURCH
NAME OF PROJECT

700 W. BROAD ST.
ADDRESS

CONTRACT PURCHASER – THE KENSINGTON OF FALLS CHURCH, LLC — 703-773-4663
OWNER — TELEPHONE #

11921 FREEDOM DRIVE, SUITE 950 | RESTON, VA 20190 | ATTN: HARLEY COOK — 703-796-1011
ADDRESS — FAX. #

CURRENT PROPERTY OWNERS:
RPC #51-131-003 & #51-131-005
FALLS CHURCH 316. LLC
6403 BURKE WOODS DRIVE
BURKE, VA 22015

APPLICATION FOR REVIEW AND APPROVAL BY

CITY OF FALLS CHURCH, VIRGINIA

Certification

COMMONWEALTH OF VIRGINIA
KAREN L. S. WHITE
Lic. No.041850
8/25/14
PROFESSIONAL ENGINEER

Signature

WALTER L. PHILLIPS INCORPORATED
ESTABLISHED 1945
Engineers • Surveyors • Planners
Landscape Architects • Arborists
207 PARK AVENUE
FALLS CHURCH, VIRGINIA 22046
(703) 532-6163 Fax (703) 533-1301
www.WLPINC.com

Site Plan C-0101

CONSTRUCTION NOTES

CONTRACTOR AND DEVELOPER ARE ADVISED THAT ANY ELECTRONIC FILES ASSOCIATED WITH THE PREPARATION OF THESE PLANS WILL NOT BE RELEASED TO OTHERS FOR USE IN CONSTRUCTION STAKEOUT OR RELATED SERVICES.

1. THE EXISTING UNDERGROUND UTILITIES SHOWN HEREON ARE BASED UPON AVAILABLE INFORMATION. THE CONTRACTOR SHALL BE RESPONSIBLE FOR DETERMINING THE EXACT LOCATION OF ALL UTILITIES BEFORE COMMENCING WORK AND FOR ANY DAMAGES WHICH MAY OCCUR BY HIS FAILURE TO LOCATE OR PRESERVE THESE UNDERGROUND UTILITIES. IF DURING CONSTRUCTION OPERATIONS THE CONTRACTOR SHOULD ENCOUNTER UTILITIES OTHER THAN IN THOSE SHOWN ON THE PLANS, HE SHALL IMMEDIATELY NOTIFY THE ENGINEER AND TAKE NECESSARY AND PROPER STEPS TO PROTECT THE FACILITY AND ASSURE THE CONTINUANCE OF SERVICE.

2. THE CONTRACTOR SHALL DIG TEST PITS AS REQUIRED FOLLOWING NOTIFICATION AND MARKING OF ALL EXISTING UTILITIES BY MISS UTILITY TO VERIFY THE LOCATION AND DEPTH OF EXISTING UTILITIES. TEST HOLES TO BE PERFORMED AT LEAST 30 DAYS PRIOR TO START OF CONSTRUCTION. ANY DISCREPANCIES ARE TO BE REPORTED IMMEDIATELY TO THE OWNER AND ENGINEER. REDESIGN AND APPROVAL BY REVIEWING AGENCIES SHALL BE OBTAINED IF THIS INSTANCE OCCURS.

3. THE CONTRACTOR SHALL BE RESPONSIBLE FOR NOTIFYING THE OWNER AND THE ENGINEER OF ANY CHANGES OR CONDITIONS ATTACHED TO PERMITS OBTAINED FROM ANY AUTHORITY ISSUING PERMITS.

4. THE CONTRACTOR SHALL VISIT THE SITE AND SHALL VERIFY EXISTING CONDITIONS PRIOR TO STARTING CONSTRUCTION.

5. THE CONTRACTOR SHALL CLEAR THE SITE OF ALL TREES, BUILDINGS, FOUNDATIONS, ETC. WITHIN THE LIMITS OF CONSTRUCTION UNLESS OTHERWISE SPECIFIED, AND SHALL BE RESPONSIBLE FOR CAUSING EXISTING UTILITIES TO BE DISCONNECTED.

6. THE DEVELOPER SHALL PROVIDE OVER-LOT GRADING TO PROVIDE POSITIVE DRAINAGE AND PRECLUDE PONDING OF WATER.

7. FINISHED GRADES SHOWN FOR FINISHED TOP OF CURB GRADES ON EXISTING ROADS SHALL BE FIELD ADJUSTED AS REQUIRED TO CONFORM TO THE INTENT OF THE TYPICAL SECTION USING THE EXISTING EDGE OF PAVEMENT AS THE CONTROL POINT. A SMOOTH GRADE SHALL BE MAINTAINED FROM THE CENTERLINE OF THE EXISTING RIGHT-OF-WAY TO THE FACE OF CURB TO PRECLUDE THE FORMING OF FALSE GUTTERS AND/OR THE PONDING OF WATER ON THE ROADWAY. THE EXISTING PAVEMENT SHALL BE RECAPPED AND/OR REMOVED AND REPLACED AS REQUIRED TO ACCOMPLISH THIS REQUIREMENT. CURB FORMS SHALL BE INSPECTED AND APPROVED FOR HORIZONTAL AND VERTICAL ALIGNMENT BY CITY OF FALLS CHURCH INSPECTORS PRIOR TO PLACING OF CONCRETE. CONTRACTOR SHALL REFER TO THE ARCHITECTURAL AND STRUCTURAL DRAWINGS FOR FINISHED GRADES ON TOP OF STRUCTURED PARKING DECK.

8. ALL AREAS, ON OR OFF-SITE, WHICH ARE DISTURBED BY THIS CONSTRUCTION AND WHICH ARE NOT PAVED OR BUILT UPON, SHALL BE ADEQUATELY STABILIZED TO CONTROL EROSION AND SEDIMENTATION. THE MINIMUM ACCEPTABLE STABILIZATION SHALL CONSIST OF PERMANENT GRASS, SEED MIXTURE TO BE AS RECOMMENDED BY THE CITY AGENT. ALL SLOPES 3:1 AND GREATER SHALL BE SODDED AND PEGGED OR OTHERWISE STABILIZED IN A MANNER APPROVED BY CITY OF FALLS CHURCH.

9. EXISTING WELLS SHALL BE PERMANENTLY ABANDONED IN ACCORDANCE WITH VIRGINIA STATE WATER CONTROL BOARD REQUIREMENTS.

10. ALL OVER HEAD POLE LINES SHALL BE RELOCATED AS REQUIRED BY THE OWNING UTILITY COMPANIES AND AT THE DEVELOPERS EXPENSE. THE CONTRACTOR SHALL BE RESPONSIBLE FOR MAKING ALL ARRANGEMENTS AND COORDINATING ALL WORK REQUIRED FOR THE NECESSARY RELOCATIONS.

11. SUBBASE MATERIAL SHOWN ON THE TYPICAL STREET SECTION SHALL CONFORM TO VDOT SPECIFICATIONS SECTION 209. PAVEMENT THICKNESS AS SHOWN ON THE PLAN ARE BASED ON AN ASSUMED SOIL SUPPORT VALUES (S.S.V.) OF 10 UNLESS OTHERWISE NOTED. A QUALIFIED SOILS TESTING FIRM SHALL BE ENGAGED BY THE CONTRACTOR TO DETERMINE THE ACTUAL S.S.V. IN ACCORDANCE WITH "A DESIGN GUIDE FOR SUBDIVISION PAVEMENTS IN VIRGINIA" BY N.K. VASWANI, OCTOBER 1973, VHRC 73-821 AS AMENDED. SOIL SUPPORT VALUES SHALL BE OBTAINED AT EACH CHANGE IN SUBGRADE SOILS AND AT A MAXIMUM SPACING OF 500 FEET WHERE SUBGRADE SOILS REMAIN CONSTANT. S.S.V. SHALL BE FURNISHED TO THE ENGINEER AND THE ENGINEER SHALL REVISE THE PAVEMENT DESIGN THICKNESS TO SHOW THE ACTUAL DEPTH OF PAVEMENT MATERIAL REQUIRED AND SHALL SUBMIT THE REVISION TO THE CITY OF FALLS CHURCH FOR REVIEW AND APPROVAL. THE CONTRACTOR IS ADVISED NOT TO BRING THE AREA SUBJECT TO THIS REVISION TO FINISHED GRADE UNTIL AFTER THE REVISED PAVEMENT SECTION IS APPROVED.

12. PRIOR TO BEGINNING CONSTRUCTION, CONTRACTOR SHALL VERIFY FROM THE ARCHITECTURAL DRAWINGS ALL DIMENSION, DETAILS, AND TREATMENTS FOR THE PROPOSED BUILDINGS, WALKWAYS, AND OTHER PROPOSED CONSTRUCTION WHERE INDICATED ON THE PLANS. ANY DISCREPANCIES SHALL IMMEDIATELY BE REPORTED TO DESIGN ENGINEER.

13. THE CONTRACTOR IS TO VERIFY INVERT, SIZE AND LOCATION OF BUILDING UTILITY CONNECTIONS WITH THE MECHANICAL PLANS PRIOR TO PLACEMENT OF UNDERGROUND UTILITIES.

14. NO UNDERGROUND SOILS INVESTIGATION HAS BEEN PERFORMED BY WALTER L. PHILLIPS, INC. ALL SOILS INFORMATION PRESENTED AS PART OF THIS SITE PLAN HAS BEEN PREPARED BY OTHERS AND IS INCLUDED AS REQUIRED FOR CITY OF FALLS SITE PLAN APPROVAL.

15. THE CONTRACTOR SHALL REMOVE EXISTING BUILDINGS, FENCES AND OTHER EXISTING PHYSICAL FEATURES AS REQUIRED.

16. ALL PROPOSED SIDEWALK, CG-6, CG-2 OR CG-6R IS TO BE CONSTRUCTED WITH A MINIMUM 4" AGGREGATE BASE.

17. EXISTING CONSTRUCTION SHALL BE REMOVED TO NEAREST JOINT. NEW CONSTRUCTION SHALL BE PROVIDED AS SHOWN AND ANY DAMAGED AREA SHALL BE REPAIRED TO MATCH CONDITIONS EXISTING PRIOR TO CONSTRUCTION.

18. DAMAGE TO ANY EXISTING ENTRANCES, CURB AND GUTTER, PAVEMENT OR OTHER EXISTING STRUCTURES NOT PROPOSED TO BE DISTURBED WITH THIS DEVELOPMENT, WILL BE THE RESPONSIBILITY OF THE CONTRACTOR AND MUST BE REPAIRED TO THE SATISFACTION OF THE CITY OF FALLS CHURCH, THE VIRGINIA DEPARTMENT OF TRANSPORTATION AND ANY ADJOINING OWNERS THAT MAY BE AFFECTED.

19. THE CONTRACTOR SHALL BE RESPONSIBLE FOR MAKING A SMOOTH TRANSITION TO EXISTING CURB.

20. ALL PRIVATE BUILDING CONNECTIONS ARE TO BE INSTALLED IN ACCORDANCE WITH THE CURRENT PLUMBING CODE.

21. SEE ARCHITECTURAL AND/OR LANDSCAPE DRAWINGS FOR DIMENSIONS AND DETAILS FOR ALL RETAINING WALLS. ALL ON-SITE RETAINING WALLS ARE SUBJECT TO A SEPARATE BUILDING PERMIT TO BE OBTAINED BY OWNER. THIS PLAN IS FOR APPROXIMATE LOCATION AND PROPOSED GRADING ONLY. GEOTECHNICAL AND STRUCTURAL DESIGN TO BE ACCOMPLISHED BY OTHERS. RETAINING WALLS SHOWN ON THIS PLAN ARE FOR THE PURPOSES OF DEMONSTRATING THE PROPOSED TOP AND BOTTOM ELEVATIONS AND LOCATION OF THE WALLS ONLY. RETAINING WALLS ARE TO BE MAINTAINED BY THE PROPERTY OWNERS.

22. TOPS OF EXISTING STRUCTURES WHICH REMAIN IN USE ARE TO BE ADJUSTED IN ACCORDANCE WITH THE GRADING PLAN. ALL PROPOSED STRUCTURE TOP ELEVATIONS ARE TO BE VERIFIED BY THE CONTRACTOR WITH THE SITE GRADING PLANS. IN CASE OF CONFLICT, THE GRADING PLAN SHALL SUPERSEDE PROFILE ELEVATIONS. MINOR ADJUSTMENTS TO MEET FINISHED GRADE ELEVATIONS MAY BE REQUIRED.

23. SEE LANDSCAPE PLAN FOR ALL ON-SITE SIDEWALK, PLANTING AND IRRIGATION DETAILS.

24. THE DESIGN, CONSTRUCTION, FIELD PRACTICES AND METHODS SHALL CONFORM TO THE REQUIREMENTS SET FORTH BY THE CITY OF FALLS CHURCH AND ITS CURRENT ZONING ORDINANCE AND CONSTRUCTION STANDARDS MANUAL. FAILURE TO COMPLY WITH THE CODE, APPLICABLE MANUALS, PROVISIONS OF THE CONSTRUCTION AND ESCROW AGREEMENTS OR THE PERMITS SHALL BE DEEMED A VIOLATION.

25. THE APPROVAL OF THESE PLANS SHALL IN NO WAY RELIEVE THE OWNER/DEVELOPER OR HIS AGENT OF ANY LEGAL RESPONSIBILITIES WHICH MAY BE REQUIRED BY THE CODE OF VIRGINIA OR ANY ORDINANCE ENACTED BY THE GOVERNING AGENCY.

26. A MINIMUM PERMISSIBLE GRADE OF 1.00% IS REQUIRED FOR PAVEMENT TO ASSURE POSITIVE DRAINAGE. IF THERE IS EXISTING PAVEMENT WHICH IS TO REMAIN DISTURBED DURING CONSTRUCTION AND IS LESS THAN 1.00%, THEN THE CONTRACTOR IS TO CHECK TO MAKE SURE THE SITE AREA WILL HAVE ADEQUATE DRAINAGE.

27. IT IS THE CONTRACTOR'S RESPONSIBILITY TO MAKE SURE THAT ANY EXISTING LANDSCAPING WHICH IS TO BE RELOCATED ON THE SITE WILL BE CAREFULLY STORED IN A DESIGNATED AREA BEFORE BEING REPLANTED. COORDINATION WITH THE OWNER FOR MUTUALLY AGREEABLE STORAGE LOCATIONS FOR LANDSCAPE MATERIAL SHALL BE THE RESPONSIBILITY OF THE CONTRACTOR. THE CONTRACTOR SHALL BE RESPONSIBLE FOR THE REPLACEMENT OF PLANT MATERIAL THAT DOES NOT SURVIVE STORAGE AND REPLANTING.

28. CONSTRUCTION STAKEOUT SHALL BE UNDER THE DIRECT SUPERVISION OF A LICENSED LAND SURVEYOR IN THE COMMONWEALTH OF VIRGINIA.

29. NO EVIDENCE OF GRAVES OR BURIAL SITES HAS BEEN FOUND ON THIS PROPERTY.

30. THE PROPERTY OWNERS HEREBY JOIN IN THE SITE PLAN AND AGREE TO BE BOUND BY ALL PLAN REQUIREMENTS.

SIGNATURE

Harley D. Cook

NAME DATE

Authorized Member

TITLE

31. A WALL CHECK SURVEY WILL BE REQUIRED WHEN THE BUILDING RISES ABOVE GRADE DURING CONSTRUCTION.

32. CONTRACTOR AND GEOTECHNICAL ENGINEER TO SUBMIT AN ACCEPTABLE PLAN AND METHOD STATEMENT FOR THE SAFE DISPOSAL OF GROUNDWATER FROM THE SITE TO THE CITY.

SURVEY NOTES

1. THE PROPERTY SHOWN HEREON IS DESIGNATED BY THE CITY OF FALLS CHURCH, VIRGINIA, AS REAL PROPERTY CODE (RPC) NUMBER 51-131-003 AND 51-131-005 AND IS ZONED B-1

2. THE PROPERTY IS NOW IN THE NAME OF FALLS CHURCH 316, LLC AS RECORDED IN DEED BOOK 4586 AT PAGE 2680 AMONG THE LAND RECORDS OF ARLINGTON COUNTY, VIRGINIA.

3. THIS PLAT AND THE SURVEY UPON WHICH IT IS BASED SHOWS ONLY THOSE IMPROVEMENTS THAT ARE OBSERVABLE AND CAN BE LOCATED USING NORMAL SURVEY METHODS. THE UNDERGROUND UTILITIES SHOWN HAVE BEEN LOCATED FROM FIELD SURVEY INFORMATION, MISS UTILITY MARKINGS AND EXISTING RECORDS. THERE ARE NO GUARANTEES, EITHER EXPRESS OR IMPLIED, THAT THE UNDERGROUND UTILITIES SHOWN COMPRISE ALL SUCH UTILITIES IN THE AREA, EITHER IN SERVICE OR ABANDONED, OR THAT THE UNDERGROUND UTILITIES SHOWN ARE IN THE EXACT LOCATION INDICATED. THE UNDERGROUND UTILITIES HAVE NOT BEEN PHYSICALLY LOCATED.

4. TOTAL AREA OF THE PROPERTY IS 33,835 SQUARE FEET OR 0.7768 ACRES.

5. THIS PLAT IS BASED ON A CURRENT FIELD SURVEY BY THIS FIRM.

6. THE FEDERAL EMERGENCY MANAGEMENT AGENCY'S FLOOD INSURANCE RATE MAP FOR THE CITY OF FALLS CHURCH, VIRGINIA, MAP NUMBER 5100540001C, REVISED DATE JULY 16, 2004, DESIGNATES THE PROPERTY AS BEING IN ZONE X, "AREAS DETERMINED TO BE OUTSIDE THE 0.2% ANNUAL CHANCE FLOODPLAIN."

7. EASEMENTS, CONDITIONS, COVENANTS AND RESTRICTIONS, SHOWN AND/OR NOTED, TAKEN FROM THE TITLE COMMITMENT ISSUED BY FIRST AMERICAN TITLE INSURANCE COMPANY, COMMITMENT NUMBER NCS 588492-DC72 DATED JANUARY 23, 2013.

8. THE PROPERTY SHOWN HEREON IS REFERENCED TO THE NORTH AMERICAN VERTICAL DATUM OF 1929 AS COMPUTED FROM A FIELD RUN VERTICAL CONTROL SURVEY AND IS REFERENCED TO THE VIRGINIA COORDINATE SYSTEM OF 1983, [NAD 83(2011)(EPOCH:2010.0000)] AS COMPUTED FROM A FIELD RUN HORIZONTAL SURVEY WHICH TIES THIS PROPERTY'S BOUNDARY TO NOAA/NGS MONUMENT PID NUMBER DH4144; LWX1 STERLING CORS ARP. THE SCALE FACTOR (ELEVATION FACTOR X GRID FACTOR) WHICH HAS BEEN APPLIED TO THE FIELD DISTANCES TO DERIVE THE REFERENCED COORDINATES IS 0.99995950. THE FOOT DEFINITION USED FOR CONVERSION OF THE MONUMENT COORDINATES AND IN THE PERFORMANCE OF THE FIELD SURVEY IS THE U.S. SURVEY FOOT. CONTOUR INTERVAL IS TWO FEET.

9. THIS SURVEY WAS COMPLETED UNDER THE DIRECT AND RESPONSIBLE CHARGE OF, JAMES A. MADISON, JR., L.S., FROM AN ACTUAL X GROUND OR AIRBORNE SURVEY MADE UNDER MY SUPERVISION; THAT THE IMAGERY AND/OR ORIGINAL DATA WAS OBTAINED ON MARCH 1, 2013, 2012; AND THAT THIS PLAT, MAP, OR DIGITAL GEOSPATIAL DATA INCLUDING METADATA MEETS MINIMUM ACCURACY STANDARDS UNLESS OTHERWISE NOTED.

10. THIS SURVEY WAS PERFORMED AT THE REQUEST OF KENSINGTON SENIOR DEVELOPMENT, LLC.

ZONING TABULATION

EXISTING ZONE: B-1

SITE AREA: 33,835 SF OR 0.78 AC

	REQUIRED	PROVIDED
MAX. BUILDING HT.	55 FT.	69.45*
AVERAGE GRADE		313.23
MAX. FAR	NONE	
MIN. YARD REQUIREMENTS:		
FRONT (FROM FACE OF CURB)	20 FT.	20.9' (W. BROAD ST.) 14.3' (N. LEE ST.)
SIDE	NONE	0' (NORTHEAST) 15.9' (NORTHWEST)
REAR	NONE	N/A

*SPECIAL EXCEPTION APPROVED FOR MAXIMUM BUILDING HEIGHT OF 73'

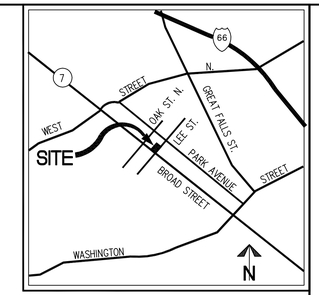

VICINITY MAP SCALE: 1"=2000'

PARKING TABULATION

REQUIRED

RESIDENCE (HUMAN CARE)	88 UNITS 117 RESIDENTS (EXPECTED MAX. OCCUPANCY) 120 LICENSED BEDS = 30 SPACES	1 PER 4 BEDS OF MAXIMUM CAPACITY
	40 STAFF MEMBERS = 40 SPACES	1 FOR EVERY FULLTIME STAFF MEMBER ON THE MAXIMUM SHIFT
CULTURAL ACTIVITIES (ART GALLERY)	1,100 SF = 3 SPACES	1 PER 400 SF OF FLOOR AREA
RETAIL (FOOD-BAKERY/ DELI)	1,900 SF = 10 SPACES	1 PER 200 SF OF FLOOR AREA
TOTAL SPACES REQUIRED:	**83 SPACES INCLUDING 4 ACCESSIBLE SPACES**	

TOTAL SPACES PROVIDED: 53 SPACES (INCLUDING 5 ACCESSIBLE SPACES, 2 OF WHICH ARE VAN)
36% REDUCTION REQUESTED
PER VOLUNTARY PROFFERED CONDITION #15, 80% OF PARKING SPACES TO BE 9.0' WIDE WITH NO COLUMN INTRUSIONS

LOADING SPACE TABULATION

REQUIRED:
RETAIL - 1 SPACE
HUMAN CARE - 1 SPACE

PROVIDED:
RETAIL/ HUMAN CARE - 1 SPACE SHARED

AVERAGE GRADE CALCULATION

POINT	EXISTING	PROPOSED
1	314.14	314.50
2	312.25	311.80
3	310.20	314.00
4	316.31	316.30
AVERAGE	313.23	314.15
LOWEST AVE GRADE		313.23

BUILDING HEIGHT CALCULATION

AVG. GRADE =	313.23
MAX. BUILD. HT.: 313.23 +73* =	386.23
FF ELEVATION =	314.0
FF TO MIDPOINT OF ROOF =	68.68
ACTUAL BUILDING HT.: 314.0 + 68.68	382.68

*SPECIAL EXCEPTION APPROVED FOR MAXIMUM BUILDING HEIGHT OF 73'

AVERAGE GRADE

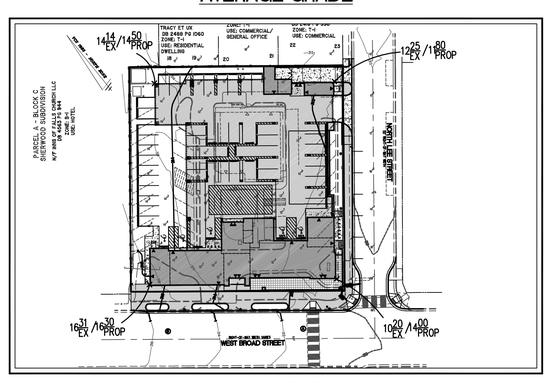

SCALE: 1"=60'

WALTER L. PHILLIPS INCORPORATED
ESTABLISHED 1945
Engineers • Surveyors • Planners
Landscape Architects • Arborists
207 PARK AVENUE
FALLS CHURCH, VIRGINIA 22046
(703) 532-6163 Fax (703) 533-1301
www.WLPINC.com

COMMONWEALTH OF VIRGINIA
KAREN L. S. WHITE
Lic. No.041850
8/25/14
PROFESSIONAL ENGINEER

DRAWN: BS, AOA
CHECKED: KW
SCALE: NONE
DATE: 8/28/14

REVISION APPROVED BY

NO.	DESCRIPTION	DATE	REV. BY	APPROVED	DATE

NOTES AND ZONING TABULATIONS

THE KENSINGTON OF FALLS CHURCH

700 WEST BROAD STREET
CITY OF FALLS CHURCH, VIRGINIA

SHEET: C-0201

Voluntary Proffered Conditions
The Kensington of Falls Church, LLC
May 5, 2014

In association with the requested rezoning, special use permit and special exception to allow the redevelopment of 700 West Broad Street, RPC #s 51-131-003 and 51-131-005 (the "Subject Property") The Kensington of Falls Church, LLC (the "Owner") voluntarily proffers the following for the benefit of the community and the City of Falls Church (the "City"):

1. **Conceptual Development Plan:**
The Subject Property shall be developed in substantial conformance with (1) the Conceptual Development Plan dated February 20, 2014 and revised through April 28, 2014 as prepared by Walter L. Phillips, Inc.; (2) the architectural elevation drawings dated March 31, 2014 as prepared by Berry Rio Architects; (3) the Parking Study dated April 2, 2014 as prepared by Berry Rio Architects; and (4) the Transportation Demand Management Plan dated April 7, 2014.

2. **Supplemental Payments:**
Owner agrees to make separate payments ("Supplemental Payments") to the City no later than June 30 of each year following the issuance of a certificate of occupancy for the Subject Property in an amount equal to the excess of the Owner's "Combined Payment" figure set forth below over the Owner's annual real estate tax obligation for the Subject Property (the "Annual Real Estate Taxes"). The Supplemental Payment under this paragraph shall start with the first full tax year after issuance of the Certificate of Occupancy. The Owner shall make its payment of Annual Real Estate Taxes for the Subject Property as required by law.

For example, if the Owner's Annual Real Estate Taxes for the Subject Property in a particular year is $100,000 (as determined by the assessment of the City's Assessor) and the Owner's Combined Payment figure is $176,250, then the Owner's Supplemental Payment for that particular year would be $76,250.

A. **Combined Payment Schedule**. Owner's Combined Payment schedule for the first three years after Certificate of Occupancy for the Subject Property shall be as follows:

Year Following Issuance of Certificate of Occupancy for the Subject Property	Combined Payment Figure (Annual Real Estate Taxes Plus Supplemental Payment)
1	$117,500
2	$176,250
3	$235,000

B. **Adjustments Starting in Year 4.** An annual adjustment will be made to the Supplemental Payment each year after Year 3 based upon the percentage change in the combined assessment and commercial tax rate for a selected group of properties (the "Basket of Properties") as set forth in this paragraph B. The intention of the Basket of Properties approach is to have the percentage change in the Combined Payment mirror the percentage change in comparable City of Falls Church commercial property real estate taxes.

i. Criteria:
The Basket of Properties will contain the ten (10) highest assessed commercial properties each year excluding the following:
a) New construction through lease up to 85% occupancy
b) In the event that a property in the Basket of Properties is redeveloped, rezoned, damaged, destroyed, or substantially renovated, it will be removed from the Basket of Properties for that particular year and replaced with the next highest assessed commercial property that meets the above criteria.

ii. Methodology:
a) The average percentage of change in the annual real estate taxes of the Basket of Properties will be determined from Year 3 to Year 4.
b) The average percentage change in the annual real estate taxes for the Basket of Properties will be applied to the Subject Property's Year 3 $235,000 Combined Payment to determine the Subject Property's fourth year Combined Payment.
c) In each subsequent year after Year 4, the average percentage change in the Basket of Properties' annual real estate taxes will be applied to the Subject Property's previous year Combined Payment to produce the Combined Payment from which the Supplemental Payment due to the City for the subsequent year will be determined.

C. **Higher of Combined Payment or Real Estate Tax Obligation Shall Prevail:** If in any year, the City of Falls Church Assessor assesses the property at a value that would produce a higher annual real estate tax obligation than the scheduled combined payment for that tax year, the real estate tax obligation will prevail as the Owner's payment for that year.

D. **Supplemental Payments Shall Not Affect Any Other Taxes:** The Supplemental Payments under this Section 2 shall not eliminate or diminish in any way the property tax, BPOL, sales, meals or any other taxes due to the City for any use on the Subject Property.

3. **LEED Criteria:**
The Owner agrees to have the Subject Property designed such that a Leadership in Energy and Environmental Design ("LEED") Accredited Professional ("LEED AP") can and will certify that the project is likely to yield at lease the points necessary to achieve LEED Silver status. Prior to Site Plan approval, the Owner will provide the City with a LEED Silver checklist as prepared by a LEED AP. Following issuance of the first Certificate of Occupancy for the Subject Property and in accordance with LEED certification from the U.S. Green Building Council. Prior to the issuance of the first Certificate of Occupancy, the Owner will provide the City with a separate twenty-five thousand dollar ($25,000.00) letter of credit which includes terms approved in advance by the City Manager to adequately assure the City that the Owner will satisfy its obligations under this paragraph to achieve LEED certification. Such letter of credit shall be returned to Owner if the intended LEED Silver certification is achieved within two years after the issuance of the first Certificate of Occupancy for the Subject Property. If the project does not achieve the intended LEED Silver certification within two (2) years after issuance of the first Certificate of Occupancy, the City will redeem the letter of credit to be used for City environmental improvements at a location(s) chosen by the City at its sole discretion. In addition, the Owner agrees to provide electrical conduits for electric vehicle charging stations and for roof-mounted solar panels.

4. **Undergrounding of Utilities**:
The Owner agrees to underground all utilities at its own expense along the West Broad Street frontage of the Subject Property (four poles), extend power under West Broad Street from the new transformer pad on the Subject Property, and reconnect the power on the south side of West Broad Street to serve the properties directly across West Broad Street from the Subject Property. All undergrounding of utilities, including the location and installation of all transformer pad(s), shall be carried out according to the specifications of all applicable utilities. No above-ground electrical or telecommunications facilities (transformers, switches, wires, etc.) shall be located within the right-of-way. This undergrounding will not create any obligation or expense for the City.

5. **Retail Spaces:**
The Owner agrees to provide the following retail spaces to be open to the public along the West Broad Street and North Lee Street frontages of the Subject Property in accordance with the following:

A. Southeast Corner Retail Space
The Owner agrees to include retail space along the south east corner of the building on the Subject Property in accordance with the following requirements:
i. At least 1,900 square feet of interior space.
ii. At least 900 square feet of an outdoor seating area, subject to final site plan approval by the Planning Commission.
iii. The kitchen shall be fully ventilated with fireproof lining to the roof for casual food service uses.

iv. The retail use shall be limited to one of the following: a restaurant, food, beverage, bakery or confectionery use.
v. The initial lease (the "Lease") for this space shall have a term no less than five (5) years. Within ten (10) days after its execution, a complete copy of the Lease for this retail space will be provided to the City by the Owner. The issuance of a Certificate of Occupancy for the assisted living facility on the Subject Property will not be conditioned upon the execution of the Lease. For the first five (5) years after the issuance of the first Certificate of Occupancy for the assisted living facility on the Subject Property, the Owner shall pay the City $100 per day for each day the 1900 square foot retail space is not occupied under a lease with a minimum term of five (5) years by a use in subparagraph (iv) above.

B. **Arts/Retail Space**
The Owner agrees to provide at least 1,100 square feet of interior space in the vicinity of the southwest corner of the building on the Subject Property for an arts space or another use(s) permitted by right by the City's Zoning Ordinance with the following conditions and exceptions:
i. Arts space shall be defined as space occupied by Falls Church Arts, Inc. or another local or regional nonprofit arts organization for art exhibitions and/or arts educational activities.
ii. If the southwest space is used as arts space, the Owner will provide this space at a per square foot rental rate at least 50% less than per square foot rental rate for the south east corner retail space.
iii. The uses allowed in the southwest corner arts/retail space shall be limited to the following: restaurant, food, beverage, bakery or confectionary uses, an arts use and, in addition, clothing stores, gift shops, florists, and music stores.

6. **Affordable Units:**
The Owner agrees to provide an annual accounting subsidy of ninety-three thousand and six hundred dollars ($93,600) upon the issuance of the first Certificate of Occupancy for the Subject Property. The baseline for the accounting subsidy will start at $93,600 for the first year and will be subject to change each year thereafter based upon the percentage change in the mean base fee for all beds in the Subject Property. (For example, if the average annual basic fee in Year 1 for basic fees in the assisted living facility on the Subject Property is $70,000, then that $70,000 figure will be deemed the equivalent of the $93,600 for the purposes of determining the annual accounting subsidy for each year after Year 1. Thus, if the average annual basic fee in Year 1 for basic fees in the assisted living facility on the Subject Property is $77,000, a 10% increase, then the accounting subsidy for Year 2 shall likewise rise 10% to $102,960. Further, if the average annual basic fee in Year 2 for basic fees in the assisted living facility on the Subject Property is $84,700, another 10% increase, then the accounting subsidy for Year 3 shall likewise rise

10% to $113,256.) The calculation of the average annual basic fee will occur on the anniversary date of the issuance of the first Certificate of Occupancy for the assisted living facility on the Subject Property.

The City will administer the application of that subsidy for up to six (6) assisted living beds on the Subject Property. This accounting subsidy shall be made available to residents with incomes at or below 80% of the HUD Area Median Income (these subsided beds shall be referred to herein as "Affordable Dwelling Units" or "ADUs"). All subsidized residents may be covered by the State of Virginia's Auxiliary Grant or if not applicable, their rental rate will be 80% of the resident's gross income minus health insurance premiums. Residents of ADUs on the Subject Property will be entitled to all meals, supervision, services, amenities, and programs that are included in the base assisted living fee for all residents.

The Owner shall provide the City with a pricing scheduled for all types of assisted living beds on the Subject Property, and shall also identify the six beds that qualify for the accounting subsidy. All ADU beds shall be placed in units of appropriate size, e.g., if an ADU bed is placed in a one bed unit, not additional beds shall be placed in that unit.

The City of Falls Church will market and provide the referrals for all ADU beds on the Subject Property and will determine, at its sole discretion, how the Owner's accounting subsidy will be applied. The same admission criteria and house rules will be used for subsidized residents as used for non-subsidized residents. If an empty ADU is not filled within one (1) month after the City is notified in writing of the vacancy, the Owner will be allowed to fill the bed at the market rate and the next available bed in a comparably sized unit will be considered and ADU med and will be made available by the Owner for one (1) month for referral by the City.

In the event the accounting subsidy for any particular calendar year is not fully exhausted in that year, then the unused amount shall not be carried over to the next year.

7. **Stormwater Management:**
The Owner agrees to meet all stormwater management requirements of the City for similar commercial projects, including, but not limited to, a 20% reduction in phosphorous discharge.

8. **Emergency Generator:**
To provide building safety for residents and responders during an emergency and to have the appropriate resilience to meet the demands for community safety, the Owner shall provide a natural gas emergency generator sized to accommodate the following loads for the Subject Property:
- Fire alarm system.

- Fire pump if equipped.
- Emergency hall and exiting lighting.
- One elevator.
- Domestic water pumps.
- Sump pumps.

In addition, the Owner agrees to comply with the Virginia Statewide Fire Prevention Code and the City of Falls Church Fire Prevention and all other applicable codes. The Owner agrees to comply with the City's Building Safety and Fire Official regarding location of fire department connections, Knox box locations, hydrants locations and fire lanes.

9. **Bus Shelter and Shuttle Service:**
The Owner agrees to construct a bus shelter with appropriate signage and landing pad amenities at a location to be determined by the City Manager during Site Plan approval. The type of bus shelter must be approved by the City prior to construction. In lieu of building the foregoing bus shelter, the Owner shall pay the City fifteen thousand dollars ($15,000.00) prior to obtaining the building permit as its contribution towards a bus shelter elsewhere in the City at the discretion of the City. In addition, the Owner agrees to provide a shuttle service to the East and/or West Falls Church metro stops for its employees, along with the financial incentives outlined in the Owner's approved Transportation Demand Management Plan.

10. **Parking Spaces to Support Employees:**
As part of the conditions to employment, the Owner agrees that no persons employed on the Subject Property will be allowed to park on City streets. All employees on the Subject Property will park in the parking garage on the Subject Property during their shift.

11. **Bicycle Storage:**
The Owner shall provide bicycle rack facilities for a minimum of twenty (20) bicycles for both employees and other users of the Subject Property. These bicycle rack facilities shall be shown on the Site Plan and shall be maintained in good condition by the Owner. The type of bicycle rack facility provided by the Owner shall be approved by the City.

12. **Parking and the TDM Plan:**
In conjunction with the development and operation of the proposed project, the approved TDM strategies identified in the "Transportation Demand Management Plan" dated April 7, 2014 will be employed, subject to adjustment during the Site Plan Approval process.

The Transportation Demand Management Plan details how the 53 space parking garage adequately addresses the needs of *(i) visitors, (ii) assisted living employees, (iii)*

WALTER L. PHILLIPS INCORPORATED
ESTABLISHED 1945
Engineers • Surveyors • Planners
Landscape Architects • Arborists
207 PARK AVENUE
FALLS CHURCH, VIRGINIA 22046
(703) 532-6163 Fax (703) 533-1301
www.WLPINC.com

SCALE: NONE | DATE: 8/26/14 | DRAWN: BS, AOA | CHECKED: KW

COMMONWEALTH OF VIRGINIA
KAREN L. S. WHITE
Lic. No.041850
8/25/14
PROFESSIONAL ENGINEER

REVISION APPROVED BY					
NO.	DESCRIPTION	DATE	REV. BY	APPROVED	DATE

VOLUNTARY CONCESSIONS
THE KENSINGTON OF FALLS CHURCH
700 WEST BROAD STREET
CITY OF FALLS CHURCH, VIRGINIA

SHEET: C-0202

employees of the two retail spaces, and (iv) retail customers. There will be no parking on the Subject Property for residents and all lease agreements with assisted living residents shall prohibit parking on the Subject Property by residents.

Owner agrees that all trash trucks and deliveries serving the Subject Property shall be limited to the hours of 7:00 a.m. to 7:00 p.m. Monday through Friday and from 9:00 a.m. to 7:00 p.m. on weekends and holidays.

13. **Parking Garage Height and Travel Lanes:**
The Owner shall construct the garage on the Subject Property so as to enable a 20-foot long emergency vehicle to traverse the garage and pick-up a person needing help at an area adjacent to the elevator(s) that is large enough to comfortably handle a portable gurney and rescue personnel. Further, the Owner will provide that the garage will be at least twelve (12) feet in height in order to assure that emergency vehicles will have sufficient clearance for safe passage in the garage.

14. **Parking Garage Safety Radio:**
The Owner shall ensure that the parking garage is constructed in a manner that permits public safety radio signals to be transmitted and received within the garage. The Owner shall install the necessary equipment to transmit and receive such signals and successfully perform a radio transmission test inside the garage to the satisfaction of the City upon completion of the project. No Certificate of Occupancy will be issued for the Subject Property before the satisfactory completion of the aforesaid test. Should the Owner fail the test, it agrees to implement a solution acceptable to the City in order to resolve the problem within ninety (90) days.

15. **Parking Space Width:**
The Owner agrees that at least 80% of the parking spaces will be at least nine (9) feet wide with no column intrusions. The Owner further agrees that the remaining spaces will be no narrower than eight and a half (8.5) feet wide, which include any column intrusions. Compliance with these specifications will be detailed on the Site Plan and no Certificate of Occupancy for the Subject Property will be issued until they are fully satisfied.

16. **Maintenance of Streetscape:**
At the discretion of the City Manager and subject to a streetscape maintenance agreement to be approved at Site Plan, the Owner agrees to maintain the streetscape improvements in perpetuity along the West Broad Street and North Lee Street frontages of the Subject Property.

17. **Crosswalk and Bump Out:**
The Owner will construct a bump out to shorten the crosswalk across North Lee Street from the Subject Property at the intersection of West Broad Street and North Lee Street and will install a thermoplastic crosswalk in the appropriate locations, including all four intersections of Lee Street and West Broad Street, as directed by the City.

18. **Architectural Improvements:**
The Owner will construct the project in accordance with the architectural finishes as submitted in the conceptual plan, with the four corners of the building on the Subject Property with the same brick and style as the front of the building, and shall match the three color brick material used in the rear of building (North elevation) to match the Broad Street frontage. In addition, the Owner agrees to add a functioning clock tower at the southeast corner of the outdoor patio.

19. **Other Proffered Conditions:**

a) The Owner acknowledges, understands and agrees that the Subject Property shall be developed in accordance with the applications approved for the Subject Property by the City Council and in full compliance with all applicable laws, codes, ordinances, charters, statutes, rules, regulations, agreements, and commitments.

b) The City of Falls Church Commissioner of Revenue and/or his designated staff shall have access to the garage on the Subject Property at all times for inspection of window stickers related to personal property taxes for vehicles. The Commissioners of Revenue shall be provided all credentials necessary for him and his staff to have access to the parking garage by vehicle at all times. In the event the access credentials are changed or updated, the Commissioner of Revenue shall be provided notice and updated access credential within thirty (30) calendar days.

c) Prior to demolition of the existing structure on the Subject Property, the Owner shall secure the approval of the City of a demolition, parking, and staging plan. Once the contractor has been selected for the project, the Owner shall work with City Staff to prepare a construction parking plan and construction traffic and staging plan for the entire construction phase of the project.

d) The Owner shall designate a representative who is physically present on a regular basis on the Subject Property to serve as a liaison to the community for the period leading up to the issuance of the first Certificate of Occupancy and for two years thereafter. The name and telephone number of the liaison shall be provided in writing by the Owner to the Zoning Administrator.

e) The Owner agrees that these Voluntary Proffered Conditions shall apply to and be binding upon all future owners, and upon all heirs, successors and assigns of any portion of the Subject Property, and the Owner further agrees that it will provide a copy of these Voluntary Proffered Conditions to any such future owner, heir, successor and assign prior to transferring any interest in the Subject Property to any such person, firm, corporation, or other entity.

We hereby proffer that the development of the Subject Property shall be in strict accordance with the conditions set forth in this submission.

The Kensington of Falls Church, LLC

By: H Cook May 5, 2014

Name: Harley D. Cook Date

Title: Authorized Member

ORDINANCE 1924

ORDINANCE TO AMEND THE OFFICIAL ZONING MAP OF THE CITY OF FALLS CHURCH TO REMOVE THE MIXED-USE REDEVELOPMENT-1 (MUR-1) DESIGNATION FROM APPROXIMATELY 0.7768 ACRES OF LAND LOCATED AT 700 WEST BROAD STREET (REAL PROPERTY CODE NUMBERS 51-131-003 AND 51-131-005)

THE CITY OF FALLS CHURCH, VIRGINIA, HEREBY ORDAINS that the Official Zoning Map of the City of Falls Church be amended and reenacted as follows:

The City of Falls Church Official Zoning District Map dated November 2010, shall have the "MUR-1" overlay removed from the parcel known as 700 West Broad Street, Real Property Code numbers 51-131-003 and 51-131-005, Lots 5 and 6, Block C, zoned B-1 Limited Business; and the Voluntary Proffered Conditions from The Kensington of Falls Church, LLC dated May 5, 2014, signed, submitted, and attached hereto as part of this ordinance amendment are hereby accepted.

1st Reading: 3-10-14
2nd Reading: 5-27-14
Adoption: 5-27-14

IN WITNESS WHEREOF, the foregoing was adopted by the City Council of the City of Falls Church, Virginia on May 27, 2014 as Ordinance 1924.

Kathleen Clarken Buschow

Kathleen Clarken Buschow
City Clerk

Attachments in PDF form:
Proffers
Zoning Map

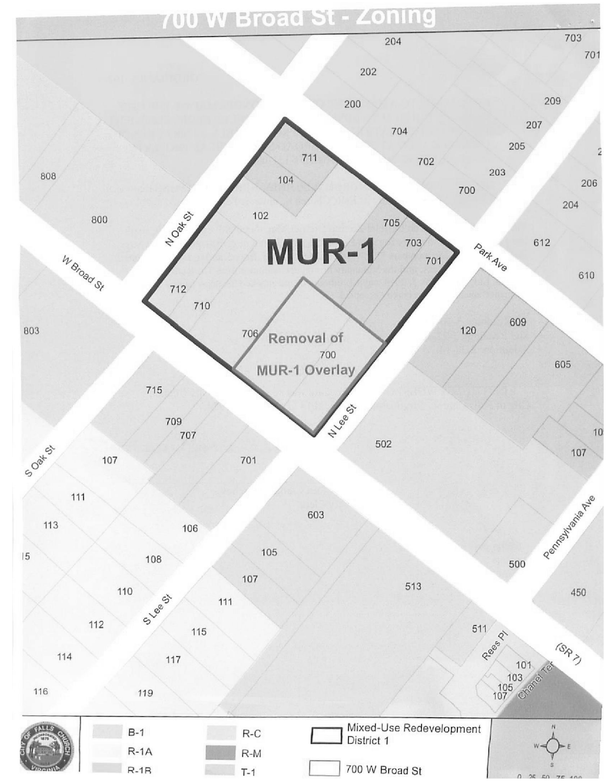

	Voluntary Concession #	Response and Method Compliance	Associated Plan #, Plat #, or Deed Book and Page	Comments
1	Conceptual Development Plan	The plan is in substantial conformance with the CDP, architectural elevation, drawings, parking study, and the transportation Demand Management Plan.		
2	Supplemental Payments			
2a	Combined Payment Schedule			
2b	Adjustments Starting in Year 4			
2c	Higher of Combined Payment or Real Estate Tax Obligation Shall Prevail			
2d	Supplemental Payments Shall Not Affect Any Other Taxes			
3	LEED Criteria	As required, a LEED checklist will be submitted prior to site plan approval.		
4	Undergrounding of Utilities	All utilities are proposed to be underground.	See sheet C-0401	
5	Retail Spaces	Retail spaces are provided.	See sheet C-0401	
5a	Southeast Corner Retail Space	The plan shows a café in the retail space at the southeast corner of the site.	See sheet C-0401	
5b	Arts/Retail Space	The plan shows an art gallery in the retail space at the southwest corner of the building.	See sheet C-0401	
6	Affordable Units			
7	Stormwater Management	All stormwater management and BMP requirements are met with this plan.	See sheet C-0702	
8	Emergency Generator	The emergancy generator will be provided on the roof.	Refer to Architect Plans for location.	
9	Bus Shelter and Shuttle Service	As discussed, an alternate layout has been submitted for review.	See sheet C-0402	
10	Parking Spaces to Support Employees			
11	Bicycle Storage	There are bike racks proposed along N. Lee St. as well as inside the garage that will provide parking for 20 bikes.	See sheet C-0401	
12	Parking and the TDM Plan			
13	Parking Garage Height and Travel Lanes	The parking lot layout is sufficient for a 20' medic unit to traverse.	See sheet C-1102	
14	Parking Garage Safety Ratio			
15	Parking Space Width	80% of the parking stall widths are 9'.	See C-0401	
16	Maintenance of Streetscape	The owner is to maintain the streetscape frontages of the subject poperty.	See note 6 on sheet C-0401	
17	Crosswalk and Bump Out	The plan shows the improvements to the crosswalks and bump outs.	See sheet C-0401	
18	Architectural Improvements	The architectural finishes are as shown in the conceptual plan. The clock tower is located on the southeast corner of the site.	See sheets A4.0.1 & A4.0.2 See sheet C-0401	
19	Other Proffered Conditions			

WALTER L. PHILLIPS INCORPORATED
ESTABLISHED 1945
Engineers • Surveyors • Planners
Landscape Architects • Arborists
207 PARK AVENUE
FALLS CHURCH, VIRGINIA 22046
(703) 532-6163 Fax (703) 533-1301
www.WLPINC.com

COMMONWEALTH OF VIRGINIA
KAREN L. S. WHITE
Lic. No.041850
8/25/14
PROFESSIONAL ENGINEER

SCALE: NONE DATE: 8/25/14 DRAWN: BS, AOA CHECKED: KW

REVISION APPROVED BY

NO.	DESCRIPTION	DATE	REV. BY	APPROVED	DATE

VOLUNTARY CONCESSIONS
THE KENSINGTON OF FALLS CHURCH
700 WEST BROAD STREET
CITY OF FALLS CHURCH, VIRGINIA

SHEET: C-0203

NOTE:
NUBS TO BE FINALIZED AT SITE PLAN. DESIGN MAY BE ALTERED DUE TO STORM SEWER INLET #301 AND 42" x 72" PIPE UNDER LEE STREET

"I HEREBY PROFFER THAT THE DEVELOPMENT OF THE SUBJECT PROPERTY SHALL BE IN STRICT ACCORDANCE WITH THE CONDITIONS SET FORTH IN THIS SUBMISSION."

HARLEY COOK

Cadd Dwg. File: Q:\sdskproj\13014\dwg\Engineering\Special Exception\13014C-0401.dwg

SHEET: 1 OF 2

CONCEPTUAL DEVELOPMENT PLAN - LAYOUT

THE KENSINGTON OF FALLS CHURCH
AT 700 WEST BROAD ST
CITY OF FALLS CHURCH, VIRGINIA

SCALE: 1" = 30' | DATE: 2/20/2014; REV. 04/28/2014 | DRAWN: BS, AOA | CHECKED: KW

WALTER L. PHILLIPS INCORPORATED ESTABLISHED 1945
Engineers • Surveyors • Planners
Landscape Architects • Arborists
207 PARK AVENUE
FALLS CHURCH, VIRGINIA 22046
(703) 532-6163 Fax (703) 533-1301
www.WLPINC.com

SECTION A-A: BROAD STREET

TYPICAL

SCALE: 1"=10'

SECTION C-C: NORTH LEE STREET

TYPICAL

SCALE: 1"=10'

SECTION B-B: BROAD STREET

TYPICAL

SCALE: 1"=10'

Cadd Dwg. File: Q:\sdskproj\13014\dwg\Engineering\Special Exception\13014C-0401.dwg

SHEET: 2 OF 2

CONCEPTUAL DEVELOPMENT PLAN - STREET SECTIONS

THE KENSINGTON OF FALLS CHURCH
AT 700 WEST BROAD ST
CITY OF FALLS CHURCH, VIRGINIA

SCALE: 1" = 10' | DATE: 2/20/2014; REV. 04/28/2014 | DRAWN: BS, AOA | CHECKED: KW

WALTER L. PHILLIPS INCORPORATED ESTABLISHED 1945
Engineers • Surveyors • Planners
Landscape Architects • Arborists
207 PARK AVENUE
FALLS CHURCH, VIRGINIA 22046
(703) 532-6163 Fax (703) 533-1301
www.WLPINC.com

FOR INFORMATION ONLY

APPROVED SPECIAL EXCEPTION CONCERPTUAL DEVELOPMENT PLAN

THE KENSINGTON OF FALLS CHURCH

700 WEST BROAD STREET
CITY OF FALLS CHURCH, VIRGINIA

WALTER L. PHILLIPS INCORPORATED ESTABLISHED 1945
Engineers • Surveyors • Planners
Landscape Architects • Arborists
207 PARK AVENUE
FALLS CHURCH, VIRGINIA 22046
(703) 532-6163 Fax (703) 533-1301
www.WLPINC.com

COMMONWEALTH OF VIRGINIA
KAREN L. S. WHITE
Lic. No.041850
8/25/14
PROFESSIONAL ENGINEER

REVISION APPROVED BY

NO.	DESCRIPTION	DATE	REV. BY	APPROVED	DATE

SCALE: AS NOTED | DATE: 8/25/14 | DRAWN: BS, AOA | CHECKED: KW

SHEET: C-0204

NOTES:

1. MANHOLE TO MEET CURRENT REQUIREMENTS OF A.S.T.M. SPEC. C-476
2. ALL REINFORCING STEEL TO MEET CURRENT REQUIREMENTS OF A.S.T.M. SPEC. A-615
3. CONCRETE TO BE CLASS A.
4. TAPERED JOINT WITH O-RING GASKET TO MEET CURRENT REQUIREMENTS OF A.S.T.M. SPEC. C-361
5. PIONEER 301 MASTIC OR APPROVED EQUAL SHALL BE USED IN ADDITION TO THE JOINT SPECIFIED.
6. GROUT INVERTS SHALL CONSIST OF A PORTLAND CEMENT CONCRETE MIX TO VIRGINIA DEPARTMENT OF TRANSPORTATION SPECIFICATION FOR CLASS B-2 OR CONTAINING 1 PART CEMENT, 2 PARTS MORTAR SAND AND 3 1/2 PARTS AGGREGATE. THE SURFACE SHALL BE HAND TROWELED SMOOTH WITH NO COARSE AGGREGATE EXPOSED AND THE BENCHES ARE TO HAVE A LIGHT BROOM FINISH.
7. FLEXIBLE JOINT REQUIRED ON ALL PIPE CONNECTIONS TO MANHOLE. FLEXIBLE JOINT PIPE TO MANHOLE SLEEVE MAY BE KOR-N-SEAL, INTERSPACE, PRESSWEDGE OR APPROVED EQUAL. INSTALLATION SHALL BE IN ACCORDANCE WITH MANUFACTURER'S INSTRUCTIONS. REFER ALSO TO STD. DETAILS.
8. JOINT CONFIGURATION MAY BE CAST BELL-UP OR SPIGOT-UP.

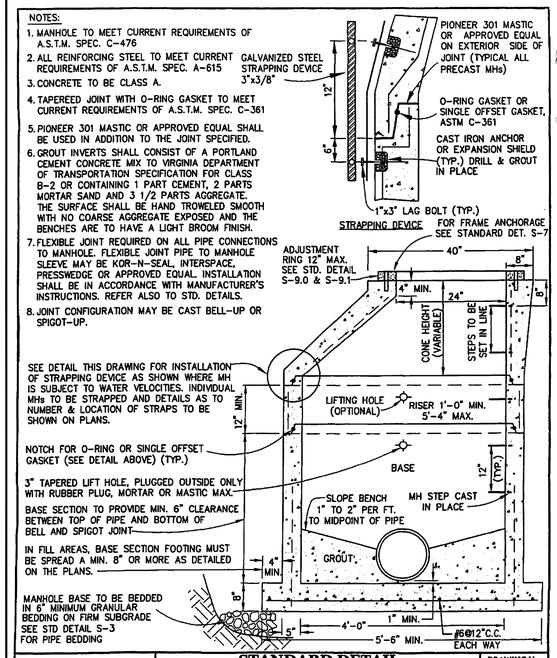

DATE:	STANDARD DETAIL TYPICAL 4'-0" I.D. PRECAST CONCRETE MANHOLE	DRAWING No. S 1.0
REVISED: BY	CITY OF FALLS CHURCH, VIRGINIA DEPARTMENT OF ENVIRONMENTAL SERVICES PUBLIC UTILITIES DIVISION	
APPROVED:		
PREPARED:		SCALE: NONE

ALL ACCESS COVER LIDS ON ALL MANHOLES WITHIN CITY RIGHT OF WAY OR EASEMENTS AND TO BE PUBLICLY MAINTAINED MUST BE PAM ACCESS OVER AS APPROVED BY ENGINEERING STAFF.

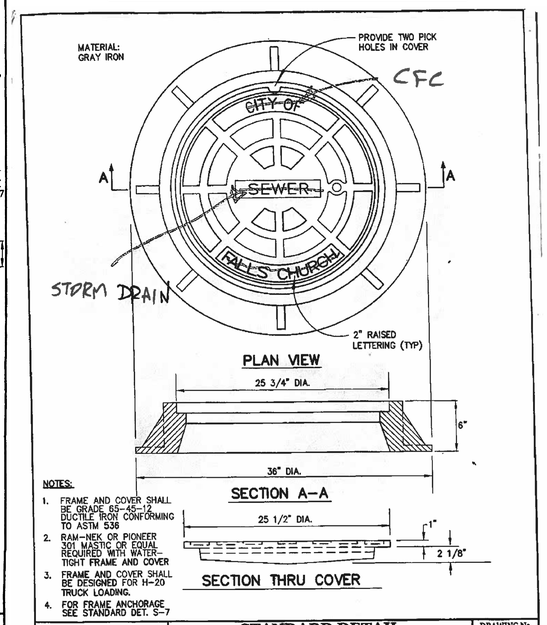

NOTES:

1. FRAME AND COVER SHALL BE GRADE 65-45-12 DUCTILE IRON CONFORMING TO ASTM 536
2. RAM-NEK OR PIONEER 301 MASTIC OR EQUAL REQUIRED WITH WATER-TIGHT FRAME AND COVER
3. FRAME AND COVER SHALL BE DESIGNED FOR H-20 TRUCK LOADING.
4. FOR FRAME ANCHORAGE SEE STANDARD DET. S-7

DATE:	STANDARD DETAIL STANDARD MANHOLE FRAME & COVER	DRAWING No. S 10.0
REVISED: BY	CITY OF FALLS CHURCH, VIRGINIA DEPARTMENT OF ENVIRONMENTAL SERVICES PUBLIC UTILITIES DIVISION	
APPROVED:		
PREPARED:		SCALE: NONE

NOTE :

1. CONCRETE TO BE CLASS A.
2. ALL REINFORCING TO MEET REQUIREMENTS OF CURRENT A.S.T.M. SPEC. A-615
3. MANHOLE SECTIONS TO MEET REQUIREMENT OF CURRENT A.S.T.M. SPEC. C-478
4. TAPERED JOINT WITH O-RING GASKET TO MEET CURRENT REQUIREMENTS OF A.S.T.M. SPEC. C-361.
5. DOGHOUSE OPENING MAY ONLY BE USED WHEN PLACING A NEW MANHOLE OVER AN EXISTING LINE; OTHERWISE, THE OPENING MUST BE CAST. SIZE, LOCATION & ANGLE OF ENTRY SHALL BE AS REQUIRED BY THE PLANS.
6. MANHOLE SECTION TO BE CASE IN THE BASE OF A MINIMUM OF 2".
7. JOINT CONFIGURATION MAY BE CAST BELL-UP OR SPIGOT-UP.
8. HOLES IN PRECASE UNITS ARE TO BE 4" MIN. TO 8" MAX. LARGER THAN THE OUTSIDE DIA. OF THE PROPOSED PIPE.
9. BASE SECTION TO PROVIDE MIN. 6" CLEARANCE BETWEEN TOP OF PIPE OPENING AND BOTTOM OF BELL AND SPIGOT JOINT.

CHART "A"

MIN. DIMENSIONS			
MH	4'-0"	5'-0"	6'-0"
A	48"	60"	72"
B	58"	72"	86"
C	5"	6"	7"
D	6"	8"	10"

NOTE:
FOR DOGHOUSE BASE CONSTRUCTED OVER PVC PIPE, REMOVE EXISTING PVC PIPE BEYOND BASE DIMENSIONS AND BELL/PLAIN END INSERT SHORT LENGTHS OF PVC PIPE INTO STANDARD MANHOLE BASE WITH FLEXIBLE GASKET CONNECTORS

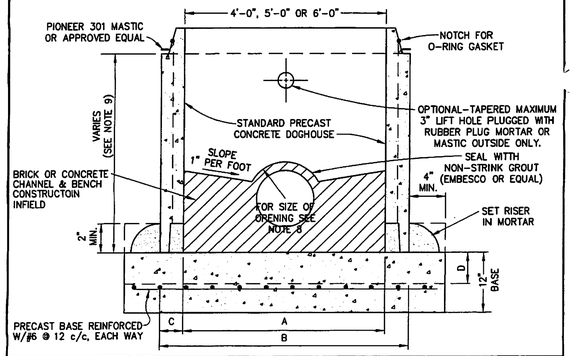

DATE:	STANDARD DETAIL PRECAST CONCRETE MANHOLE DOGHOUSE BASE	DRAWING No. S 4.0
REVISED: BY	CITY OF FALLS CHURCH, VIRGINIA DEPARTMENT OF ENVIRONMENTAL SERVICES PUBLIC UTILITIES DIVISION	
APPROVED:		
PREPARED:		SCALE: NONE

CITY OF FALLS CHURCH SEWER MAIN CONSTRUCTION NOTES

1. Sewer main construction shall comply with the latest issues of the City of Falls Church Technical Specifications and Standard Details for Sewer Main Construction, DEQ/VDH Manual of Practice for Sewerage Systems, VDOT Road & Bridge Specifications & Standards, and Fairfax County Public Facility Manual (PFM).
2. Prior to commencing the sewer main construction, the Contractor shall verify of all the underground utilities (Power, Gas, Telephone, TV Cables, Water, Storm Sewer, within the project site. The contractor shall notify MISS UTILITY @ 811 Three (3) working days in advance. The Contractor shall be solely and entirely liable for any accident and/or damage caused by the construction of this project.
3. The Contractor shall notify the City of Falls Church, Department of Public Works, 703-248-5350, of any conflict with other existing utilities in the field at least (3) working days in advance, in order for the City to correct or adjust the design prior to installing the affected portion of sewer.
4. All sewer mains shall be PVC pipes SDR-35, unless otherwise approved by the City of Falls Church.
5. There is no sewer main less than eight (8) inches in diameter allowed to be permanently installed in the City of Falls Church Sewer System.
6. Sewer house service connection (lateral) and sewer tap to the main shall be privately owned and maintained. The City's responsibility stops at the sewer main, located in the street right-of-way or easement.
7. All construction must be done in compliance with The Occupational Safety and Health Act (OSHA) of 1970, and all rules and regulations thereto appurtenant.
8. The Contractor shall be responsible of any repair and restoration required prior to finish grading and surfacing of the streets and/or easements. Final acceptance will not be considered or granted until after the streets have been resurfaced or the easements finally graded to equal or better than the original condition.
9. Tapping into existing manholes for a sewer pipe 10" or less in diameter will be done by coring. Pipe sizes 12" diameter and larger may be connected to the manhole wall with a short length of pipe with a joint within two feet (2') of the inside face of the manhole wall.
10. The lateral connection to the main sewer shall be installed at two feet (2') minimum distance from any pipe joint (center to center). This shall also apply to the distance between 2 laterals.
11. Manhole frames subject to 115-20 highway loading shall be set in an approved non-shrink grout.
12. Sewer subject to vehicle traffic shall be installed with a minimum cover of 6 feet. Otherwise, it shall be protected from effects of traffic with HS-20 highway loading.

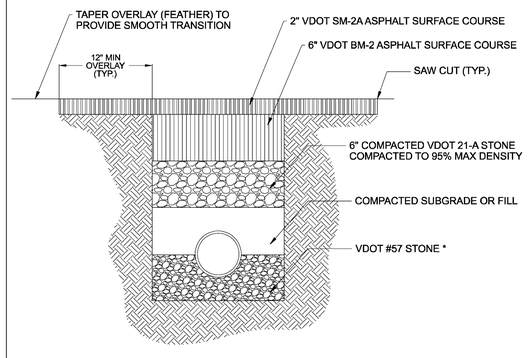

* NOTE: PIPE SHOWN FOR REFERENCE ONLY
REFER TO SPECIFIC PIPE DETAIL

SCALE: N.T.S.

ISSUED: 08-13-12	TRENCH RESTORATION DETAIL	DRAWING NO. R.06
REVISION: V1.0.0		
REVISION:		
APPROVED:		
CITY OF FALLS CHURCH VA PUBLIC FACILITIES MANUAL		

NOTES:
1. PAVEMENT PATCH FOR UTILITY INSTALLATION
2. PAVEMENT THICKNESS SHOWN HERE ARE MINIMUMS. CONTRACTOR TO MATCH EXISTING PAVEMENT SECTION IF THICKER

DI-4D, 4E, 4F

TABLE OF QUANTITIES

TYPE	L	AREA OF SLOT	Concrete	REINFORCING STEEL																			
				BARS A		BARS B		BARS C		BARS D		BARS E		BARS F		BARS G		BARS H		WEIGHT
	Ft.	Sq. Ft.	Cu. Yds.	No.	Lin. Ft. X	No.	Lin. Ft. X	No.	Lin. Ft. X	No.	Lin. Ft. X	No.	Lin. Ft. X	No.	Lin. Ft. X	No.	Lin. Ft. X	No.	Lin. Ft. X	Lbs.
DI-4D	4'	1.83	5.60	5	4'-8"	-	-	6	9'-2"	6	4'-8"	-	-	-	-	13	1'-0"	4	4'-6"	144
	6'	2.75	6.02	5	6'-8"	3	6'-7" to 6'-10"	8	9'-2"	6	4'-8"	4	2'-0"	3	1'-6"	11	1'-0"	4	4'-6"	205
	8'	3.67	6.46	5	8'-8"	7	6'-7" to 6'-10"	8	9'-2"	6	4'-8"	4	4'-0"	3	1'-6"	11	1'-0"	4	4'-6"	252
DI-4E	10'	4.58	6.91	5	10'-8"	11	6'-7" to 6'-10"	8	9'-2"	6	4'-8"	4	6'-0"	3	1'-6"	11	1'-0"	4	4'-6"	299
	12'	5.50	7.36	5	12'-8"	15	6'-7" to 6'-10"	8	9'-2"	6	4'-8"	4	8'-0"	3	1'-6"	11	1'-0"	4	4'-6"	345
	14'	6.42	7.80	5	14'-8"	19	6'-7" to 6'-10"	8	9'-2"	6	4'-8"	4	12'-0"	3	1'-6"	11	1'-0"	4	4'-6"	392
	16'	7.33	8.25	5	16'-8"	23	6'-7" to 6'-10"	8	9'-2"	6	4'-8"	4	10'-0"	3	1'-6"	11	1'-0"	4	4'-6"	439
	18'	8.25	8.69	5	18'-8"	27	6'-7" to 6'-10"	8	9'-2"	6	4'-8"	4	14'-0"	3	1'-6"	11	1'-0"	4	4'-6"	486
	20'	9.17	9.14	5	20'-8"	31	6'-7" to 6'-10"	8	9'-2"	6	4'-8"	4	16'-0"	3	1'-6"	11	1'-0"	4	4'-6"	532
DI-4F	8'	3.67	6.43	5	8'-8"	6	6'-7" to 6'-10"	10	9'-2"	6	4'-8"	8	2'-0"	6	1'-6"	9	1'-0"	4	4'-6"	267
	10'	4.58	6.87	5	10'-8"	10	6'-7" to 6'-10"	10	9'-2"	6	4'-8"	8	3'-0"	6	1'-6"	9	1'-0"	4	4'-6"	313
	12'	5.50	7.32	5	12'-8"	14	6'-7" to 6'-10"	10	9'-2"	6	4'-8"	8	4'-0"	6	1'-6"	9	1'-0"	4	4'-6"	360
	14'	6.42	7.78	5	14'-8"	18	6'-7" to 6'-10"	10	9'-2"	6	4'-8"	8	5'-0"	6	1'-6"	9	1'-0"	4	4'-6"	407
	16'	7.33	8.21	5	16'-8"	22	6'-7" to 6'-10"	10	9'-2"	6	4'-8"	8	6'-0"	6	1'-6"	9	1'-0"	4	4'-6"	454
	18'	8.25	8.65	5	18'-8"	26	6'-7" to 6'-10"	10	9'-2"	6	4'-8"	8	7'-0"	6	1'-6"	9	1'-0"	4	4'-6"	500
	20'	9.17	9.10	5	20'-8"	30	6'-7" to 6'-10"	10	9'-2"	6	4'-8"	8	8'-0"	6	1'-6"	9	1'-0"	4	4'-6"	547

NOTES

1. DEPTH OF INLET (H) TO BE SHOWN ON PLANS.
2. THE "H" DIMENSION SHOWN ON THE STANDARDS AND SPECIFIED ON THE PLANS WILL BE MEASURED FROM THE INVERT OF THE OUTFALL PIPE TO THE TOP OF THE STRUCTURE. PLAN "H" DIMENSIONS ARE APPROXIMATE ONLY FOR ESTIMATING PURPOSES AND THE ACTUAL DIMENSIONS SHALL BE DETERMINED BY THE CONTRACTOR FROM FIELD CONDITIONS.
3. WHEN SPECIFIED ON THE PLANS THE INVERT IS TO BE SHAPED IN ACCORDANCE WITH STANDARD IS-1. THE COST OF FURNISHING AND PLACING ALL BE MATERIALS INCIDENTAL TO THE SHAPING IS TO INCLUDED IN THE BID PRICE FOR THE STRUCTURE.
4. IN THE EVENT THE INVERT OF THE OUTFALL PIPE IS HIGHER THAN THE BOTTOM OF THE STRUCTURE, THE INVERT OF THE STRUCTURE SHALL BE SHAPED WITH CEMENT MORTAR TO PREVENT STANDING OR PONDING OF WATER IN THE STRUCTURE. THE COST OF FURNISHING AND PLACING ALL MATERIALS INCIDENTAL TO THE SHAPING IS TO BE INCLUDED IN THE BID PRICE FOR THE STRUCTURE.
5. STEPS ARE TO BE PROVIDED WHEN H IS 4'-0" OR GREATER. FOR DETAILS SEE STANDARD ST-1.
6. THIS ITEM MAY BE PRECAST OR CAST-IN-PLACE.
7. #4 X 8" SMOOTH DOWELS AT APPROXIMATELY 12" C-C TO BE PLACED IN ALL AREAS ADJACENT TO ABUTTING CONCRETE TO PREVENT SETTLEMENT. IN LIEU OF DOWELS A 2" X 4" NOTCH MAY BE PROVIDED. SEE STANDARD T-DI-3, 4 FOR ALTERNATE DESIGN.
8. 3" DIAMETER WEEP HOLE TO BE LOCATED TO DRAIN SUBBASE MATERIAL. WEEP HOLE WITH 12"X10" PLASTIC HARDWARE CLOTH 1/4" MESH OR GALVANIZED STEEL WIRE, MINIMUM WIRE DIAMETER 0.033", NUMBER 4 MESH HARDWARE CLOTH ANCHORED FIRMLY TO THE OUTSIDE OF THE STRUCTURE.
9. ALL REINFORCING STEEL SHALL HAVE A MIN. COVER OF 2".
10. ALL REINFORCING STEEL TO BE CUT CLEAR OF ALL OPENINGS BY 2".
11. CAST-IN PLACE CONCRETE IS TO BE CLASS A3 (3000 PSI). PRECAST CONCRETE IS TO BE 4000 PSI.
12. THIS STANDARD IS INTENDED FOR USE IN CURB AND GUTTER SITUATIONS ONLY.
13. IF INLET IS CONSTRUCTED IN MEDIAN CURB OR WITH INTEGRAL CURB, GUTTER IS TO BE OMITTED (SEE DETAIL).
14. STANDARD INLETS MAY BE CONSTRUCTED WITH CONCRETE BLOCKS IN ACCORDANCE WITH THE DETAILS SHOWN ON STANDARD DRAWING DI-MB.
15. THIS AREA MAY BE EARTHEN, IN WHICH CASE THE EXPANSION JOINTS WILL APPLY ONLY TO CURB AND GUTTER.
16. CONCRETE QUANTITIES SHOWN ARE FOR DEPTH (H) OF 5'-2" WITHOUT PIPES. THE AMOUNT DISPLACED BY PIPES MUST BE DEDUCTED TO OBTAIN TRUE QUANTITIES. FOR INLETS OF DIFFERENT DEPTHS ADD OR SUBTRACT 0.28 CUBIC YARDS OF CONCRETE FOR EACH FOOT OF DEPTH.
17. LENGTH OF ANGLE IRON AS SHOWN ON SHEET 1 OF 2 IS TO BE L+16" AT 4.10 LBS./FT..
18. X DENOTES LENGTH OF ONE (1) BAR.
19. ALL REINFORCING BARS TO BE #5.
20. INLET MAY BE USED WITH LARGER LONGITUDINAL PIPES (60" MAXIMUM) PROVIDED UTILITY SPACE CLEARANCE IS NOT NEEDED, HORIZONTAL CLEARANCE BETWEEN ADJACENT PIPES IS ADEQUATE AND MINIMUM HEIGHT (H) EQUALS PIPE DIAMETER PLUS 3 FEET.

VDOT ROAD AND BRIDGE STANDARDS	STANDARD CURB DROP INLET (WITH UTILITY SPACE) 36" - 48" PIPE: MAXIMUM DEPTH (H) = 8' VIRGINIA DEPARTMENT OF TRANSPORTATION	SPECIFICATION REFERENCE 233 302
SHEET 2 OF 2 / 104.19	REVISION DATE	

DI-4D, 4E, 4F

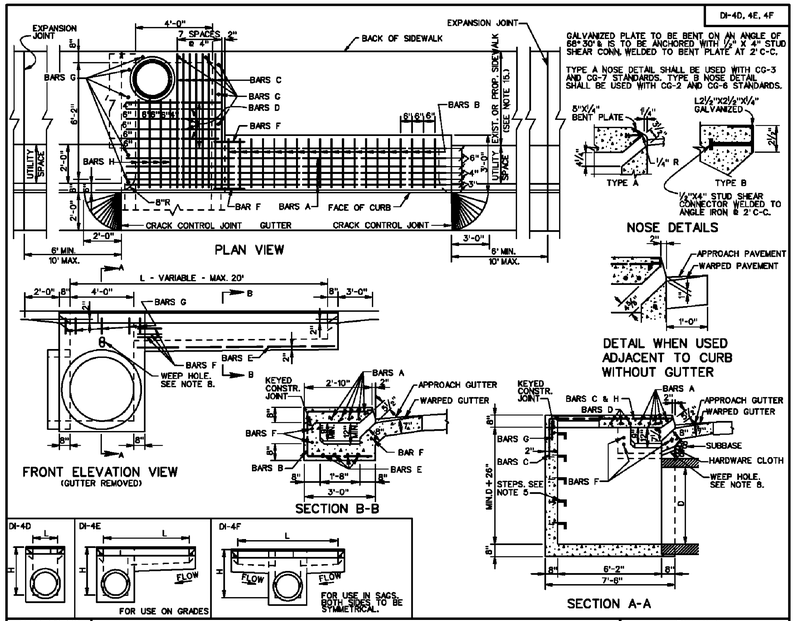

SPECIFICATION REFERENCE 233 302	MODIFIED STANDARD CURB DROP INLET 36" - 48" PIPE: MAXIMUM DEPTH (H) = 8' (WITH UTILITY SPACE) 54" - 60" MAX. PIPE: MAX. (H) = 8' (WITHOUT UTILITY SPACE) VIRGINIA DEPARTMENT OF TRANSPORTATION	VDOT ROAD AND BRIDGE STANDARDS
		REVISION DATE / SHEET 1 OF 2 / 104.18

*SEE MODIFICATIONS ON SHEET C-0802 FOR STRUCTURE #1301

WALTER L. PHILLIPS INCORPORATED ESTABLISHED 1945
Engineers • Surveyors • Planners
Landscape Architects • Arborists
207 PARK AVENUE
FALLS CHURCH, VIRGINIA 22046
(703) 532-6163 Fax (703) 533-1301
www.WLPINC.com
COMMONWEALTH OF VIRGINIA KAREN L. S. WHITE Lic. No.041850 8/25/14 PROFESSIONAL ENGINEER

SCALE: AS NOTED	DATE: 8/25/14	DRAWN: BS, AOA	CHECKED: KW

REVISION APPROVED BY			
NO.	DESCRIPTION	DATE	APPROVED

DETAILS
THE KENSINGTON OF FALLS CHURCH
700 WEST BROAD STREET
CITY OF FALLS CHURCH, VIRGINIA

SHEET: C-0205

JB-1

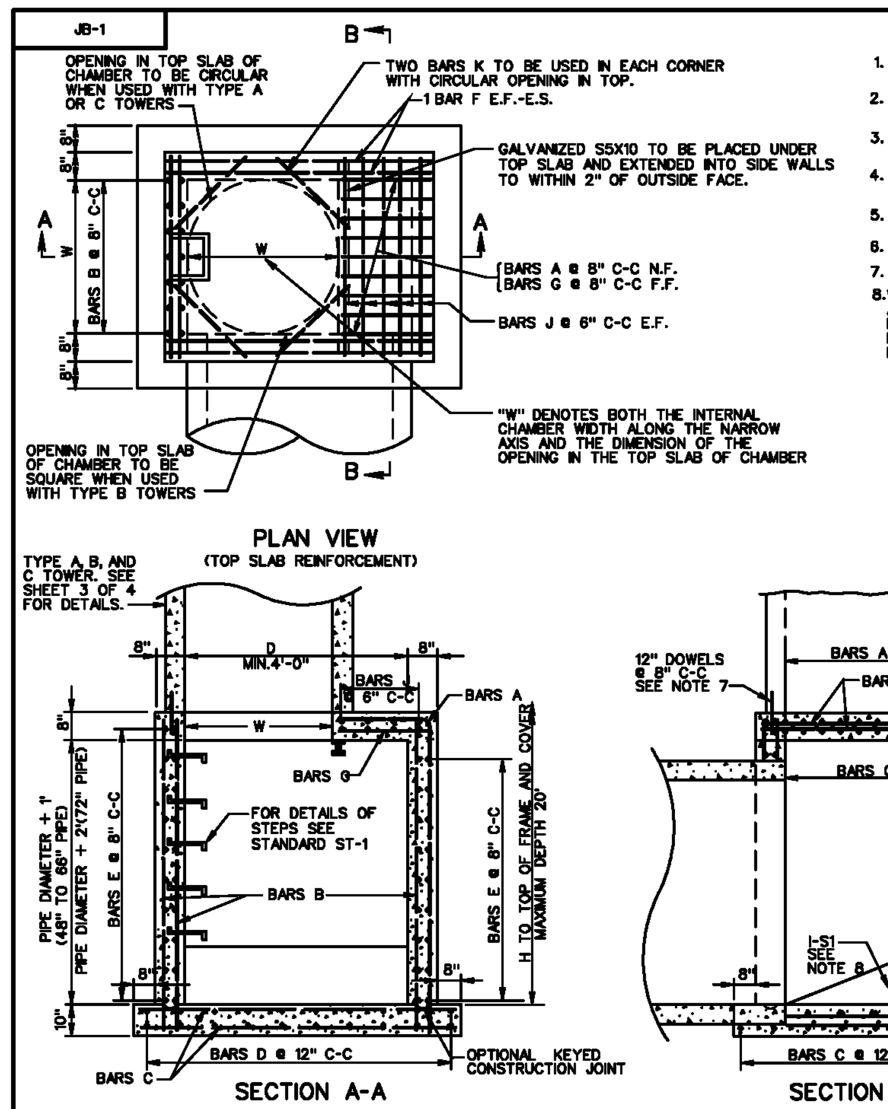

NOTES:
1. ALL REINFORCING STEEL TO BE #6 BARS WITH A MINIMUM 1½" CONCRETE COVER.
2. ANY REINFORCING BARS IN CONFLICT WITH PIPE SHELLS ARE TO BE CUT A MINIMUM OF 1½" FROM PIPE.
3. FOR DETAILS METHOD OF TURNING ANGLES AND APPROXIMATE QUANTITIES SEE SHEET 2 OF 4.
4. PRECAST CHAMBERS OF THE BOLT TOGETHER TYPE MAY BE SUBSTITUTED WHEN APPROVED ON AN INDIVIDUAL BASIS.
5. ALL CONCRETE TO BE CLASS A3 IF CAST IN PLACE, 4000 PSI IF PRECAST.
6. THIS ITEM MAY BE PRECAST OR CAST IN PLACE.
7. ELIMINATE DOWELS WHEN PRECAST TYPE A TOWER ARE ELECTED.
8. WHEN SPECIFIED ON PLANS INVERT IS TO BE SHAPED IN ACCORDANCE WITH STANDARD IS-1. THE MATERIALS INCIDENTAL TO THE SHAPING ARE NOT TO BE MEASURED OR PAID SEPARATELY BUT THE COST OF SAME IS TO BE INCLUDED IN THE PRICE BID PER CUBIC YARD OF JUNCTION BOX CONCRETE

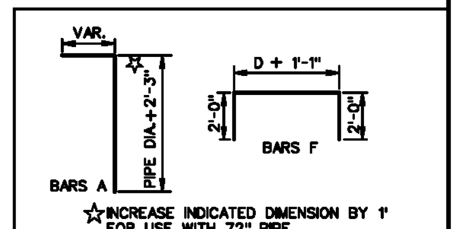

☆ INCREASE INDICATED DIMENSION BY 1' FOR USE WITH 72" PIPE.

THE LENGTH OF ALL BARS AND THE NUMBER REQUIRED WILL VARY WITH THE SIZE OF CHAMBER. FOR APPROXIMATE WEIGHT SEE SHEET 2 AND 4 OF THIS STANDARD.

BARS B, C, E, G, H, AND J ARE STRAIGHT.

VDOT ROAD AND BRIDGE STANDARDS | SHEET 1 OF 4 | REVISION DATE | 106.10

JUNCTION BOX CHAMBER DETAILS FOR 48" - 72" PIPE CULVERTS MAX. DEPTH (H) = 20'

VIRGINIA DEPARTMENT OF TRANSPORTATION

SPECIFICATION REFERENCE 105 233 302

*SEE MODIFICATIONS ON SHEET C-0802 FOR STRUCTURE #3

JB-1

DISPLACEMENT QUANTITIES FOR PIPE OPENINGS

(TO BE USED WITH ST'D JB-I JUNCTION BOX)

PIPE SIZE	PIPE CLASS	CONCRETE 0° Cu. Yards	15° Cu. Yards	30° Cu. Yards	45° Cu. Yards	REINF. STEEL Lbs.
12"	III, IV, V	.035	.036	.040	.050	17.67
12"	CM	.019	.020	.022	.027	11.06
15"	III, IV, V	.050	.052	.058	.071	24.88
15"	CM	.030	.031	.034	.042	15.93
18"	III, IV, V	.069	.072	.080	.099	33.23
18"	CM	.043	.044	.049	.061	21.68
24"	III, IV, V	.118	.122	.137	.168	53.53
24"	CM	.076	.078	.087	.108	35.83
30"	III, IV, V	.179	.186	.208	.256	78.64
30"	CM	.118	.122	.137	.168	53.53
36"	III, IV, V	.254	.263	.294	.362	108.76
36"	CM	.170	.176	.197	.242	74.76
42"	III, IV, V	.341	.353	.395	.486	143.33
42"	CM	.231	.240	.268	.330	99.53
48"	III, IV, V	.441	.457	.511	.629	182.90
48"	CM	.302	.313	.350	.431	127.85
54"	III, IV	.554	.574	.642	.789	227.29
54"	V	.580	.600	.672	.826	237.42
54"	CM	.382	.396	.443	.545	159.70
60"	III, IV	.679	.704	.787	.965	276.49
60"	V	.708	.734	.821	1.009	287.65
60"	CM	.472	.481	.551	.673	195.09
66"	III, IV	.818	.847	.948	1.166	330.50
66"	V	.849	.880	.985	1.211	342.70
66"	CM	.571	.591	.662	.814	234.02
72"	III, IV	.969	1.004	1.123	1.382	389.34
72"	V	1.003	1.040	1.163	1.431	402.58
72"	CM	.679	.704	.787	.969	276.49

SPECIFICATION REFERENCE 105 233 302

JUNCTION BOX DISPLACEMENT QUANTITIES FOR 48" - 72" PIPE CULVERTS

VIRGINIA DEPARTMENT OF TRANSPORTATION

VDOT ROAD AND BRIDGE STANDARDS | REVISION DATE | SHEET 4 OF 4 | 106.13

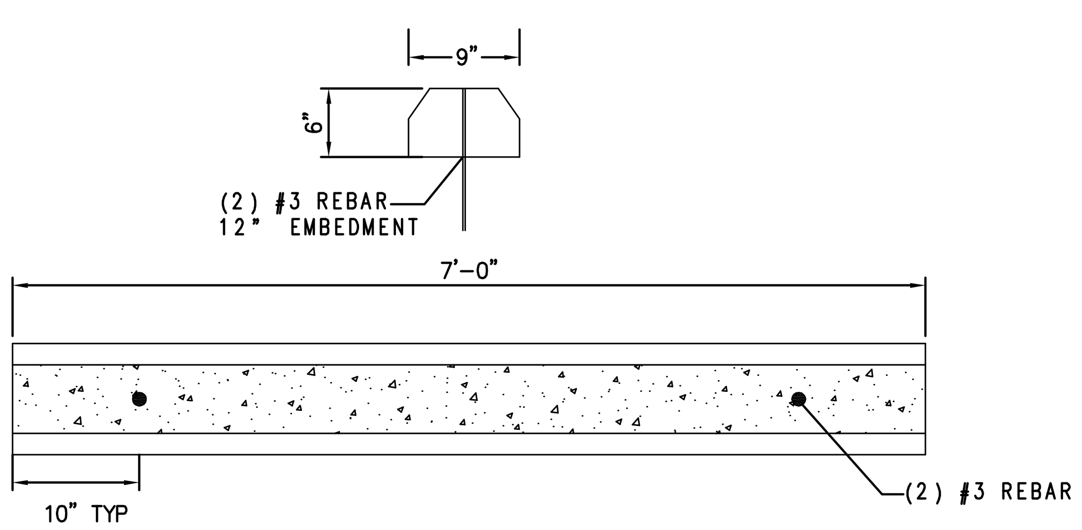

STANDARD WHEELSTOP

NOT TO SCALE

CG-12

GENERAL NOTES:
1. THE DETECTABLE WARNING SHALL BE PROVIDED BY TRUNCATED DOMES.
2. DETECTABLE WARNING TO BE CLASS A-3 CONCRETE (CLASS A-4 IF PRECAST) WITH SLIP RESISTANT INTEGRAL SURFACE COVERING THE FULL WIDTH OF THE RAMP FLOOR BY 2 FOOT IN LENGTH IN THE DIRECTION OF PEDESTRIAN TRAVEL. OTHER TYPES OF MATERIAL WITH THE TRUNCATED DOMES DETECTABLE WARNING MAY BE USED WITH THE APPROVAL OF THE ENGINEER.
3. SLOPING SIDES OF CURB RAMP MAY BE POURED MONOLITHICALLY WITH RAMP FLOOR OR BY USING PERMISSIBLE CONSTRUCTION JOINT WITH REQUIRED BARS.
4. IF RAMP FLOOR IS PRECAST, HOLES MUST BE PROVIDED FOR DOWEL BARS SO THAT ADJOINING FLARED SIDES CAN BE CAST IN PLACE AFTER PLACEMENT OF PRECAST RAMP FLOOR. PRECAST CONCRETE SHALL BE CLASS A-4.
5. REQUIRED BARS ARE TO BE NO. 5 X 8" PLACED 1' CENTER TO CENTER ALONG BOTH SIDES OF THE RAMP FLOOR, MID-DEPTH OF RAMP FLOOR. MINIMUM CONCRETE COVER 1½".
6. CURB / CURB AND GUTTER SLOPE TRANSITIONS ADJACENT TO CURB RAMPS ARE INCLUDED IN PAYMENT FOR CURB / CURB AND GUTTER.
7. CURB RAMPS ARE TO BE LOCATED AS SHOWN ON THE PLANS OR AS DIRECTED BY THE ENGINEER. THEY ARE TO BE PROVIDED AT INTERSECTIONS WHEREVER AN ACCESSIBLE ROUTE WITHIN THE RIGHT OF WAY OF A HIGHWAY FACILITY CROSSES A CURB REGARDLESS OF WHETHER SIDEWALK IS EXISTING, PROPOSED, OR NONEXISTENT. THEY MUST BE LOCATED WITHIN PEDESTRIAN CROSSWALKS AS SHOWN ON PLANS OR AS DIRECTED BY THE ENGINEER, AND SHOULD NOT BE LOCATED BEHIND VEHICLE STOP LINES, EXISTING LIGHT POLES, FIRE HYDRANTS, DROP INLETS, ETC. ACCESSIBLE ROUTES PROVIDE A CONTINUOUS UNOBSTRUCTED, STABLE, FIRM AND SLIP RESISTANT PATH CONNECTING ALL ACCESSIBLE ELEMENTS OF A FACILITY THAT CAN BE APPROACHED, ENTERED AND USED BY PEDESTRIANS.
8. RAMPS MAY BE PLACED ON RADIAL OR TANGENTIAL SECTIONS PROVIDED THAT THE CURB OPENING IS PLACED WITHIN THE LIMITS OF THE CROSSWALK AND THAT THE SLOPE AT THE CONNECTION OF THE CURB OPENING IS PERPENDICULAR TO THE CURB.
9. TYPICAL CONCRETE SIDEWALK IS 4" THICK. WHEN THE ENTRANCE RADII CANNOT ACCOMMODATE THE TURNING REQUIREMENTS OF ANTICIPATED HEAVY TRUCK TRAFFIC, REFER TO STANDARD CG-13, COMMERCIAL ENTRANCE (HEAVY TRUCK TRAFFIC) FOR CONCRETE DEPTH.
10. WHEN CURB RAMPS ARE USED IN CONJUNCTION WITH A SHARED USE PATH, THE MINIMUM WIDTH SHALL BE THE WIDTH OF THE SHARED USE PATH
11. WHEN ONLY ONE CURB RAMP IS PROVIDED FOR TWO CROSSINGS (DIAGONAL), A 4' x 4' LANDING AREA SHALL BE PROVIDED TO MANEUVER A WHEELCHAIR INTO THE CROSSWALK WITHOUT GOING INTO THE TRAVELWAY. THIS 4' x 4' LANDING AREA MAY INCLUDE THE GUTTER PAN.
12. ALL CASES WHERE CURB RAMPS INTERSECT A RADIAL SECTION OF CURB AT ENTRANCES OR STREET CONNECTIONS THE DETECTABLE WARNING SURFACE SHALL HAVE A FACTORY RADIUS OR BE FIELD -MODIFIED AS RECOMMENDED BY THE MANUFACTURER TO MATCH THE BACK OF CURB.

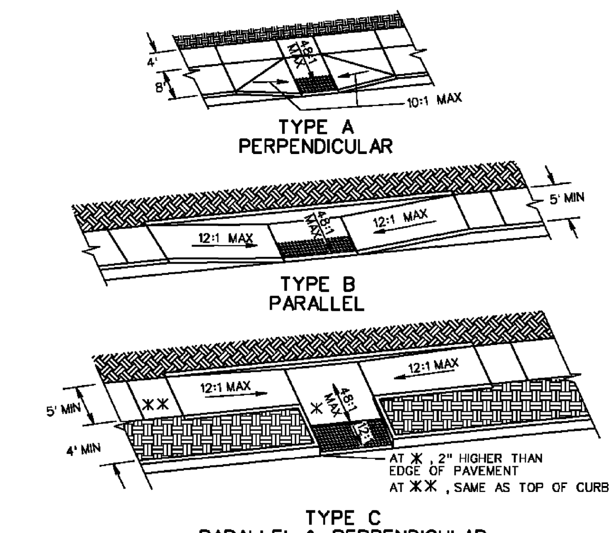

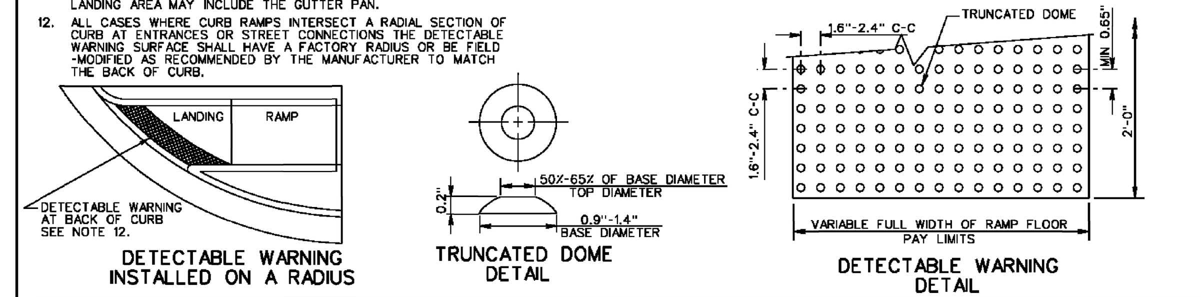

VDOT ROAD AND BRIDGE STANDARDS | SHEET 1 OF 5 | REVISION DATE 7/11 | 203.05

CG-12 DETECTABLE WARNING SURFACE

(GENERAL NOTES)

VIRGINIA DEPARTMENT OF TRANSPORTATION

SPECIFICATION REFERENCE 105 502

CITY OF FALLS CHURCH
FIRE MARSHAL
300 PARK AVENUE
FALLS CHURCH, VA 22046
Phone: (703) 248-5058 Fax: (703) 248-5158
Email: FireMarshal@fallschurchva.gov

Fire Department Connection (FDC) Signage

The Falls Church City Code requires all buildings with a Fire Department Connection (Sprinkler and/or Standpipe) must have FDC signage located 8-12 feet above the Fire Department Connection. Signage must be glow-in-the-dark or reflective with a **RED** background with at least 6 inch white lettering. Minimum size of the sign should be 14"x10". The code also requires that FDC connections be clear from trees, brush or any barriers that may hamper access to the suppression system by the fire department.

In addition, all NEW buildings are required to also include a RED exterior strobe light either above or just below the FDC sign that is tied into the fire alarm system.

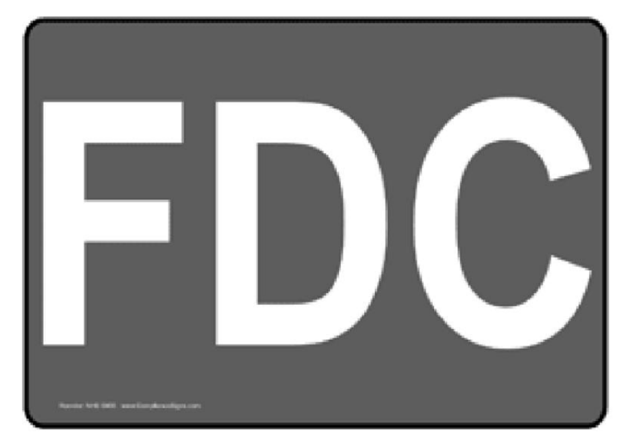

Sample from http://www.compliancesigns.com/NHE-9455.shtml

Questions regarding the procedures and clarification may be directed to the City of Falls Church Fire Marshal at FireMarshal@fallschurchva.gov or calling (703) 248-5058.

http://www.fallschurchva.gov/firemarshal

CG-12

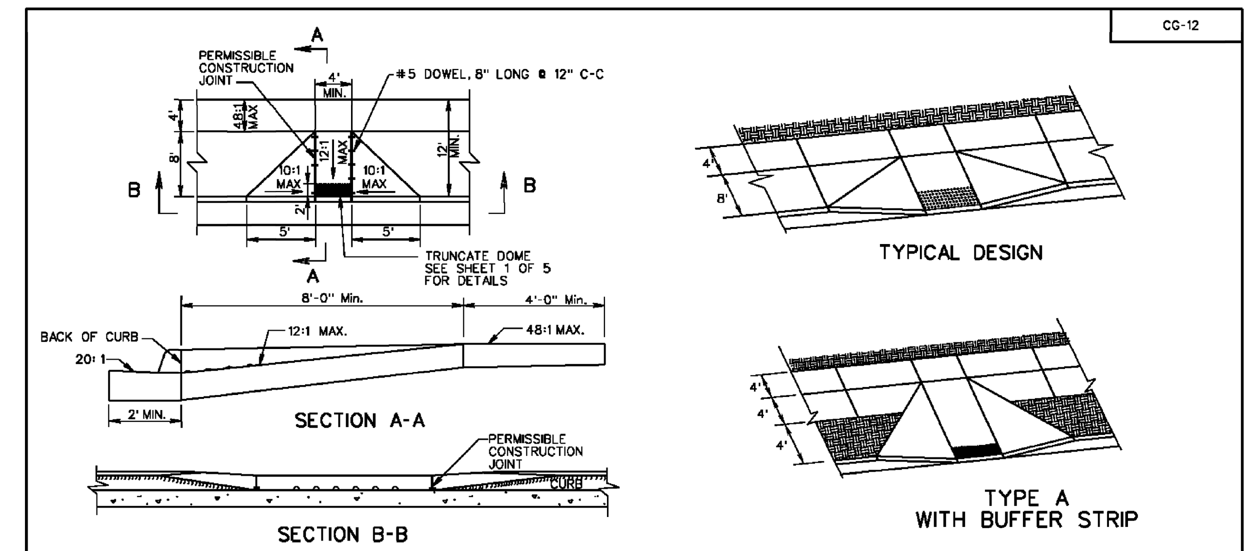

NOTES:
FOR GENERAL NOTES ON THE DETECTABLE WARNING SURFACE, SEE SHEET 1 OF 5.
THIS DESIGN TO BE USED FOR CONSTRUCTION THAT INCORPORATES WIDER SIDEWALK. LANDING (4' WIDE) REQUIRED AT TOP OF CURB RAMP. MINIMUM CURB RAMP LENGTH 8 FEET FOR NEW CONSTRUCTION, 6 FEET FOR ALTERATIONS.

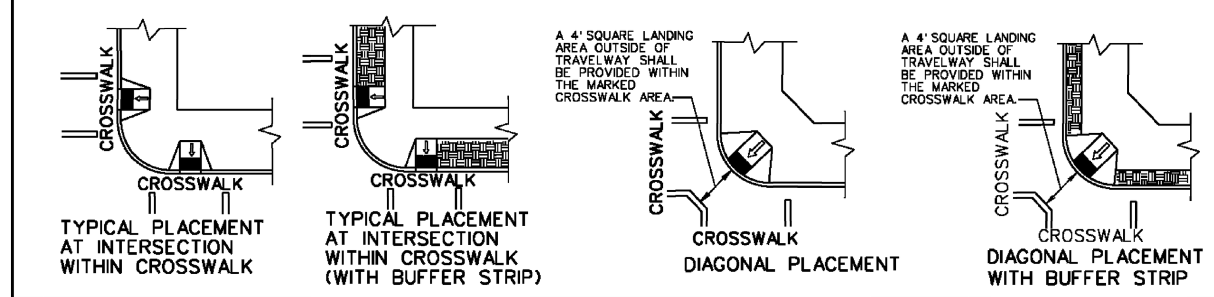

SPECIFICATION REFERENCE 105 502

CG-12 DETECTABLE WARNING SURFACE

TYPE A (PERPENDICULAR) APPLICATION

VIRGINIA DEPARTMENT OF TRANSPORTATION

VDOT ROAD AND BRIDGE STANDARDS | REVISION DATE 7/11 | SHEET 2 OF 5 | 203.06

CG-12

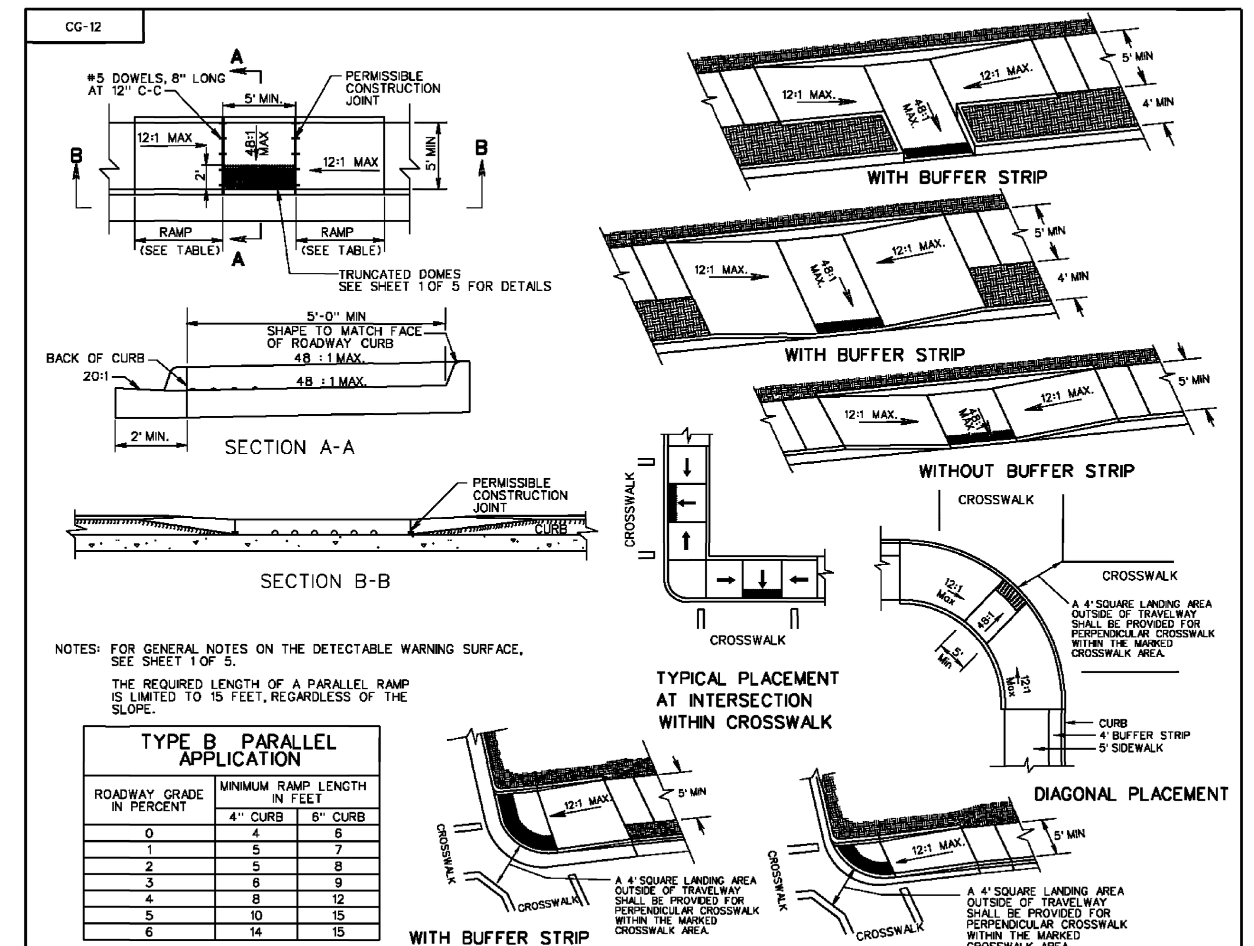

NOTES: FOR GENERAL NOTES ON THE DETECTABLE WARNING SURFACE, SEE SHEET 1 OF 5.
THE REQUIRED LENGTH OF A PARALLEL RAMP IS LIMITED TO 15 FEET, REGARDLESS OF THE SLOPE.

TYPE B PARALLEL APPLICATION

ROADWAY GRADE IN PERCENT	MINIMUM RAMP LENGTH IN FEET 4" CURB	6" CURB
0	4	6
1	5	7
2	5	8
3	6	9
4	8	12
5	10	15
6	14	15

VDOT ROAD AND BRIDGE STANDARDS | SHEET 3 OF 5 | REVISION DATE 7/11 | 203.07

CG-12 DETECTABLE WARNING SURFACE

TYPE B (PARALLEL) APPLICATION

VIRGINIA DEPARTMENT OF TRANSPORTATION

SPECIFICATION REFERENCE 105 502

CG-6

NOTES:
1. THIS ITEM MAY BE PRECAST OR CAST IN PLACE.
2. CONCRETE TO BE CLASS A3 IF CAST IN PLACE, 4000 PSI IF PRECAST.
3. COMBINATION CURB & GUTTER HAVING A RADIUS OF 300 FEET OR LESS (ALONG FACE OF CURB) SHALL BE PAID FOR AS RADIAL COMBINATION CURB & GUTTER.
4. FOR USE WITH STABILIZED OPEN-GRADED DRAINAGE LAYER, THE BOTTOM OF THE CURB AND GUTTER SHALL BE CONSTRUCTED PARALLEL TO THE SLOPE OF SUBBASE COURSES AND TO THE DEPTH OF THE PAVEMENT.
5. ALLOWABLE CRITERIA FOR THE USE OF CG-6 IS BASED ON ROADWAY CLASSIFICATION AND DESIGN SPEED AS SHOWN IN APPENDIX A OF THE VDOT ROAD DESIGN MANUAL.

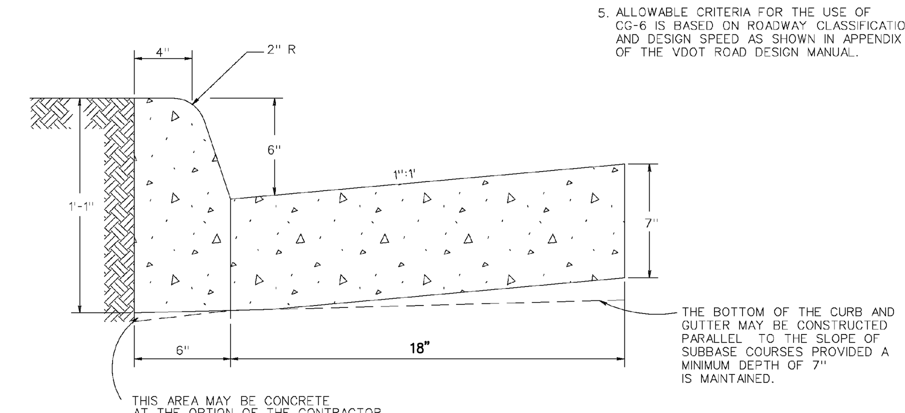

NOTE: ALL CURB AND GUTTER CONSTRUCTION METHODS AND MATERIALS SHALL COMPLY WITH VDOT SPECIFICATIONS AND DETAILS.

SPECIFICATION REFERENCE 105 502

COMBINATION 6" CURB & GUTTER

VIRGINIA DEPARTMENT OF TRANSPORTATION

REV. 9/06 | 201.03

WALTER L. PHILLIPS INCORPORATED
ESTABLISHED 1945
Engineers • Surveyors • Planners
Landscape Architects • Arborists
207 PARK AVENUE
FALLS CHURCH, VIRGINIA 22046
(703) 532-6163 Fax (703) 533-1301
www.WLPINC.com

SCALE: AS NOTED | DATE: 8/25/14 | DRAWN: BS, AOA | CHECKED: KW

COMMONWEALTH OF VIRGINIA — KAREN L. S. WHITE Lic. No.041850 8/25/14 PROFESSIONAL ENGINEER

REVISION APPROVED BY

NO.	DESCRIPTION	DATE	REV. BY	APPROVED	DATE

DETAILS

THE KENSINGTON OF FALLS CHURCH

700 WEST BROAD STREET
CITY OF FALLS CHURCH, VIRGINIA

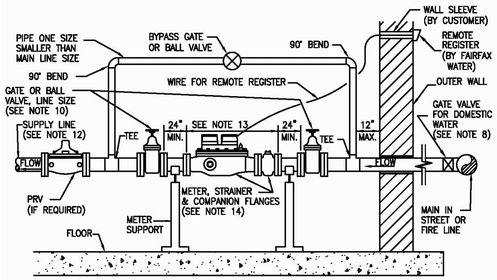

TYPICAL INSTALLATION SECTION VIEW

NOTES:
1. THE WATER METER WILL BE LOCATED IN AN ACCESSIBLE LOCATION AND WILL NOT BE INSTALLED UNDER EXISTING PIPING OR CLOSE TO OTHER FACILITIES. CRAWL SPACES ARE UNACCEPTABLE.
2. WATER METER TO BE INSTALLED NOT MORE THAN 2.0' ABOVE THE FLOOR, OR CLOSER THAN 1.0' TO ANY WALL OR OTHER FIXED OBJECT.
3. THE DEVELOPER SHALL MAKE PROVISIONS FOR DISCHARGE OF A LARGE VOLUME OF EXCESS WATER RESULTING FROM METER TESTING AND METER REPAIRS AS REQUIRED BY FAIRFAX WATER.
4. THE METER INSTALLATION WILL BE INSPECTED AND APPROVED BY FAIRFAX WATER. CALL 703-289-6402 FOR INSPECTION PRIOR TO PLACING LINE IN SERVICE. (REMOTE REGISTER TO BE INSTALLED OUTSIDE BUILDING IF REQUIRED).
5. IT SHALL BE THE RESPONSIBILITY OF THE OWNER TO PREVENT THE METER FROM FREEZING.
6. SUPPORT IS REQUIRED FOR THE METER.
7. INCOMING LINE SIZE MUST BE THE SAME AS METER SIZE AT LEAST 3' BEFORE THE METER.
8. A 3" MINIMUM GATE VALVE WITH A 2" OPERATING NUT MUST BE INSTALLED AT THE MAIN IN THE STREET OR FIRE LINE.
9. NO TAPS, PRV'S, STRAINERS, OR BACKFLOW PREVENTOR ARE TO BE INSTALLED BEFORE METER.
10. GATE VALVES OR BALL VALVES MUST BE INSTALLED ON BOTH SIDES OF THE METER, AND ON THE BYPASS. BUTTERFLY VALVES ARE NOT ACCEPTABLE.
11. FAIRFAX WATER TO SUPPLY AND INSTALL REMOTE REGISTER. WIRE FOR REMOTE REGISTER TO BE FURNISHED BY FAIRFAX WATER AND INSTALLED BY CUSTOMER IF REQUIRED.
12. BACKFLOW PREVENTIONS WILL BE REQUIRED IN ACCORDANCE WITH FAIRFAX COUNTY'S REGULATIONS.
13. 3" METER IS 24" LONG, 4" IS 29" LONG AND 6" IS 36" LONG.
14. METER, STRAINER AND COMPANION FLANGES FURNISHED BY FAIRFAX WATER AND INSTALLED BY CUSTOMER.

FAIRFAX WATER STANDARD DETAILS		SCALE: NOT TO SCALE
INTERIOR METER INSTALLATION WITH BY-PASS 3" AND LARGER COMPOUND METERS		DRAWING NO. 11
DATE: 1/12		

Y:\design\cadtails\standard details\2012\FW DETAILS JAN.dwg

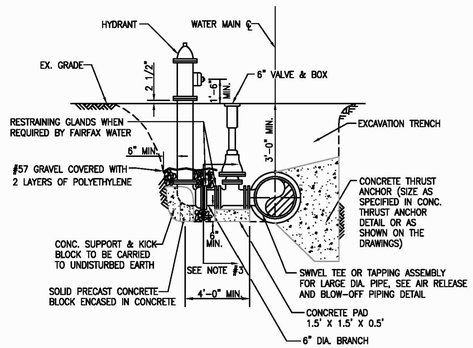

NOTES:
1. IF SWIVEL TEE IS NOT USED, VALVE MUST BE RESTRAINED TO TEE WITH RESTRAINING GLANDS BY CONTRACTOR.
2. HYDRANTS SHALL BE PAINTED AS FOLLOWS:
   HYDRANT BARREL– DURON DTM GLOSS CHINESE RED PAINT # 601834864.
   TOPS AND CAPS – DURON DURACLAD READY MIX ALUMINUM PAINT #601839327.
3. POLYETHYLENE PIPE WRAPPING TO CONTINUE UP TO 90 DEGREE BEND AT BASE OF HYDRANT.
4. FOR HYDRANT LOCATION IN REGARD TO FACE OF CURB, SEE FAIRFAX COUNTY PUBLIC FACILITIES MANUAL.

FAIRFAX WATER STANDARD DETAILS		SCALE: NOT TO SCALE
STANDARD HYDRANT INSTALLATION		DRAWING NO. 30
DATE: 1/12		

Y:\design\cadtails\standard details\2012\FW DETAILS JAN.dwg

PIPE SIZE INCHES	DEGREE OF BEND (ø)	(1) WORKING PRESSURE 175 PSI		
		T	H	L
6	90	3.0	2.0	1.25
	45	2.0	1.5	1.0
	22.5	1.5	1.0	1.0
8	90	4.0	2.5	1.75
	45	2.5	2.0	1.0
	22.5	2.0	1.5	1.0
12	90	5.5	4.0	2.25
	45	4.0	3.0	1.5
	22.5	3.0	2.0	1.0
16	90	7.5	5.0	3.25
	45	5.0	4.5	2.0
	11.25/22.5	4.0	3.0	1.5
20	90	9.5	6.0	4.0
	45	7.0	4.5	2.75
	11.25/22.5	5.5	3.0	2.0
24	90	13.0	6.5	5.5
	45	9.0	5.0	3.5
	11.25/22.5	6.0	4.0	2.0

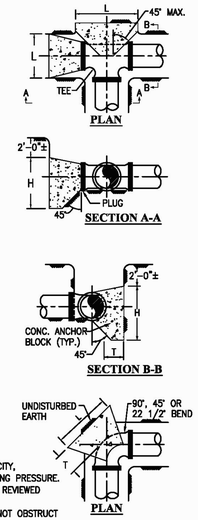

NOTES:
1. MINIMUM CONCRETE ANCHOR BLOCK DIMENSIONS IN FEET.
2. PROVIDE FORM WORK FOR ALL CONCRETE.
3. CONCRETE SHALL BE CLASS D 2000 PSI.
4. THE ABOVE TABLE IS BASED ON 2000 PSF SOIL BEARING CAPACITY, R=2PA SIN (ø/2) AND FOR A TEST PRESSURE = 1.5 x WORKING PRESSURE.
5. ANCHOR BLOCK DESIGN FOR PIPE LARGER THAN 24" SHALL BE REVIEWED ON AN INDIVIDUAL BASIS BY FAIRFAX WATER.
6. WRAP FITTING WITH POLYETHYLENE SHEETING. CONCRETE MUST NOT OBSTRUCT ACCESS TO MECHANICAL JOINT ASSEMBLY.
7. CONCRETE ANCHOR BLOCK DIMENSIONS FOR TEES TO BE SAME AS FOR 90° BENDS.
8. HEIGHT OF CONCRETE ANCHOR BLOCK ABOVE PIPE CENTERLINE IS 1/3 THE H DIMENSION.
9. BLOCKING SHALL BACK TO UNDISTURBED EARTH.

FAIRFAX WATER STANDARD DETAILS		SCALE: NOT TO SCALE
CONCRETE THRUST ANCHORS		DRAWING NO. 23
DATE: 1/12		

Y:\design\cadtails\standard details\2012\FW DETAILS JAN.dwg

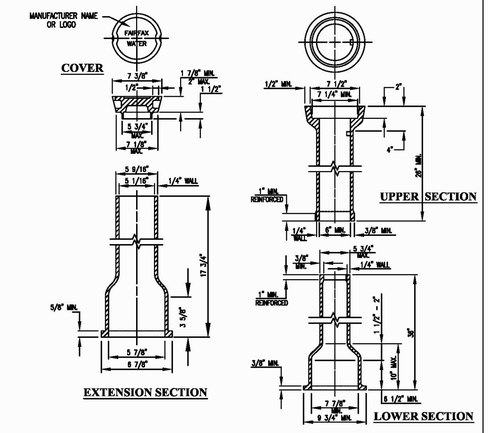

NOTES:
1. THE MANUFACTURER IDENTIFICATION AND COUNTRY OF ORIGIN (IF OTHER THAN U.S.) SHALL BE CAST INTO ALL PARTS.
2. GUARD POSTS ARE NOT TO BE INSTALLED AT VALVES UNLESS INDICATED ON DRAWINGS, OR AS SPECIFIED BY FAIRFAX WATER.
3. VALVE BOX MUST MEET SPECIFICATIONS CONTAINED IN FAIRFAX WATER'S APPROVED PRODUCTS LIST.

FAIRFAX WATER STANDARD DETAILS		SCALE: NOT TO SCALE
VALVE BOX		DRAWING NO. 27
DATE: 1/12		

Y:\design\cadtails\standard details\2012\FW DETAILS JAN.dwg

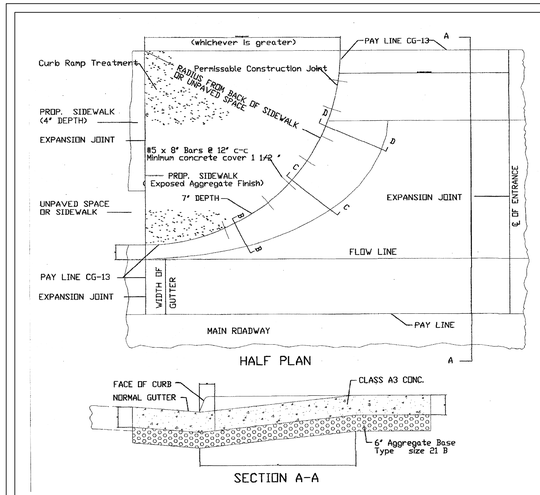

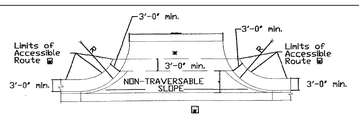

ACCESSIBLE ROUTE DETAIL

Detail to be used when the combined width of unpaved space and sidewalk space is less than 7'.

Accessible route is defined as a continuous unobstructed, stable, firm and slip resistant path connecting all accessible elements of a facility that can be approached, entered and used by persons with mobility impairments.

If accessible routes are being provided, a minimum 3' traversable width is required.

NOTES:

Prop. 7' Sidewalk is to be poured monolithically with Entrance or by using permissable construction joint with required bars.

Proposed 7' sidewalk to be class A-3 concrete with exposed aggregate finish.

Required bars are to be No. 5x8' placed 1' center to center along back of curb, mid-depth of sidewalk. Minimum Concrete cover 1 1/2 '.

All details and dimensions not shown are the same as Standard CG-9D.

This design may also be applied to other Entrance Standards as the need arises.

Limits of Exposed aggregate sidewalk for curb ramp treatment

When used in conjunction with Standard CG-3 or CG-7, the curb face on. This Standard is to be adjusted to match the mountable curb configuration.

STANDARD CG-13

SECTION

NTS

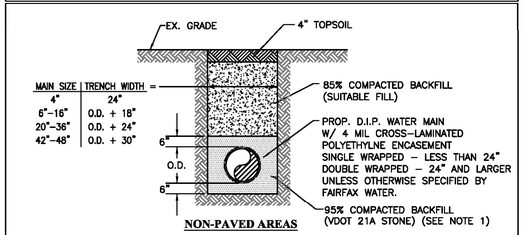

MAIN SIZE	TRENCH WIDTH =
4"	24"
6"–16"	O.D. + 18"
20"–36"	O.D. + 24"
42"–48"	O.D. + 30"

NON-PAVED AREAS

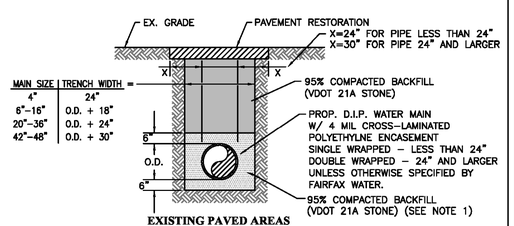

MAIN SIZE	TRENCH WIDTH =
4"	24"
6"–16"	O.D. + 18"
20"–36"	O.D. + 24"
42"–48"	O.D. + 30"

EXISTING PAVED AREAS

NOTES:
1. VDOT NO. 57 STONE SHALL BE USED AT CREEK CROSSINGS OR IN AREAS WHERE TRENCH CONTAINS GROUND WATER.
2. ALL PAVEMENT RESTORATION AND COMPACTED BACKFILL WITHIN VDOT ROW SHALL ADHERE TO ALL APPLICABLE VDOT SPECIFICATIONS.
3. RESTRAINED JOINT PIPE SHALL BE IDENTIFIED WITH MARKING TAPE PLACED 2 FEET ABOVE PIPE.
4. ALL WATER MAIN INSTALLATION IN AREAS WITH PROPOSED PAVING SHALL ADHERE TO APPROVED DEVELOPMENT PLAN.

FAIRFAX WATER STANDARD DETAILS		SCALE: NOT TO SCALE
TRENCH – DUCTILE IRON PIPE		DRAWING NO. 12
DATE: 1/12		

Y:\design\cadtails\standard details\2012\FW DETAILS JAN.dwg

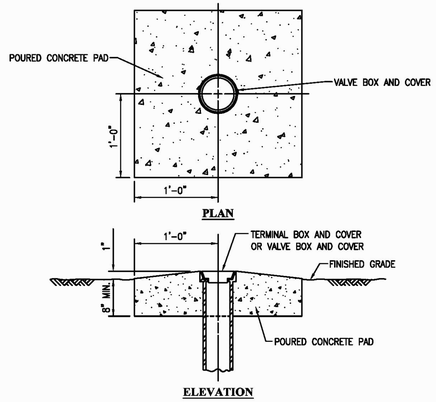

NOTES:
1. CONCRETE PADS FOR WATER MAIN VALVE AND TERMINAL BOX ARE TO BE INSTALLED USING REQUIREMENTS FOR CLASS "D" CONCRETE (2000 PSI).
2. VALVE BOX CONCRETE PAD TO BE INSTALLED ON ALL VALVES IN NON-PAVED AREAS OR AS DIRECTED BY FAIRFAX WATER.
3. GUARD POSTS ARE NOT TO BE INSTALLED AT VALVES UNLESS INDICATED ON DRAWINGS, OR AS SPECIFIED BY FAIRFAX WATER.

FAIRFAX WATER STANDARD DETAILS		SCALE: NOT TO SCALE
VALVE BOX CONCRETE PAD		DRAWING NO. 28
DATE: 1/12		

Y:\design\cadtails\standard details\2012\FW DETAILS JAN.dwg

WALTER L. PHILLIPS INCORPORATED
Engineers • Surveyors • Planners
Landscape Architects • Arborists
207 PARK AVENUE
FALLS CHURCH, VIRGINIA 22046
(703) 532-6163 Fax (703) 533-1301
www.WLPINC.com
ESTABLISHED 1945

CHECKED: KW
DRAWN: BS, AOA
SCALE: AS NOTED
DATE: 8/28/14

COMMONWEALTH OF VIRGINIA
KAREN L. S. WHITE
Lic. No.041850
8/25/14
PROFESSIONAL ENGINEER

REVISION APPROVED BY					
NO.	DESCRIPTION	DATE	REV. BY	APPROVED	DATE

DETAILS

THE KENSINGTON OF FALLS CHURCH

700 WEST BROAD STREET
CITY OF FALLS CHURCH, VIRGINIA

The Kensington of Falls Church

Transportation and Parking Management Plan
April 7, 2014

Shropshire Associates has completed traffic and parking studies of the proposed "The Kensington of Falls Church" assisted living mixed use project. The traffic analysis indicates that total peak hour traffic will be reduced by approximately 54% in the AM and 8% in the PM compared to the existing Burger King restaurant. The parking study, based upon the Institute of Transportation Engineers (ITE) industry standards, indicates that the proposed on-site parking of 52-53 spaces exceeds the maximum peak demand of 51 spaces. The applicant has proposed the following additional Transportation Demand Management (TDM) measures:

1. **Employee Mode Share Target:** From past experience, Kensington Senior Living expects 40 staff members at the peak period (9 a.m to 4 p.m.) during the week day. It is The Kensington's goal that this will result in a parking demand of 23 or fewer spaces by employees, based upon the following:

33% / 14 employees drive own single occupancy cars	=	14 cars
42% / 18 employees carpool (assumed 2 per car)	=	9 cars
25% / 10 employees take public transportation or bike	=	0 cars
Total employee cars		23 cars

On weekends the total number of employees will be approximately 10 fewer (30 total) during the peak period and result in lower employee parking demand, estimated at 19 spaces.

In order to achieve this mode sharing goal, the following TDM measures will be implemented:

2. **Metrorail and Metrobus Education and Encouragement:** As part of the hiring and training process, all employees of The Kensington will be provided printed information and encouraged to use public transportation to the property:

   - The location is directly served by MetroBus Route 28A which runs at approximately 29 minute intervals from 5:30 a.m. to 12:30 a.m. This line provides a direct connection to the West Falls Church Metro station and is approximately a 7 minute ride between West Falls Church Metro and the bus stops located in front of the Broadway (Westbound) and The Byron (Eastbound).

   - The location can also be accessed from East Falls Church Metro utilizing MetroBus Route 2A along Washington Boulevard and either transferring to the 28A Bus at Broad and Washington or walking from there the approximately seven blocks West to The Kensington.

3. **Van Transportation to/from Metro:** The Kensington will provide van transportation for its employee to and from the East and/or West Falls Church Metro stations for the two main shift changes at 7:00 AM and 3:00 PM. The 11:00 PM shift change has the lowest number of employees and is during the lowest parking demand period. The Kensington will explore sharing van transportation with the adjacent Hilton Garden Inn.

4. **Employee Financial Incentives**: The Kensington will provide the following financial incentives to employees to further encourage the use of public transportation and carpools:

   a) The Kensington will pay $100 per month toward the cost of unlimited fare card for full time peak period employees who take public transportation. (As an added benefit, employees will be able to use the same fare card for personal use.)

   b) The Kensington will pay $50 per month to employees who car pool with at least one other employee.

   c) The Kensington will pay $50 per month to employees who bike, walk or are transported to work such that they do not require or use a parking space.

   d) There will be no financial incentive for employees that drive single occupancy vehicles.

5. **Employee Parking Spaces:** The Kensington will establish and enforce through its employment agreements with all employees the following rules and requirements:

   a) All employees that elect to drive to The Kensington will be issued a parking sticker that must be displayed on the vehicle. They will be required to park in the parking spaces located furthest from the resident and retail lobby, designated in red on the attached parking plan.

   b) Employees that carpool will be issued a carpool sticker and will be required to park in carpool spaces shown in orange in the attached parking plan.

   c) Employees that drive will be required to park at The Kensington and will be prohibited by their employment agreement from parking on North Lee Street, Park Avenue or adjoining public streets.

   d) Retail and Gallery employee parking will also be required to park in red designated spaces and enforced through lease agreements with the tenants.

6. **Bicycle Parking:** The Kensington will provide Class 3 covered bike racks for up to 10 bicycles as shown behind the gallery in the attached parking plan. A separate outdoor covered Class 3 bicycle rack for up to 10 bicycles will be provided adjacent to the café, as shown on the plan, for use by retail patrons and visitors. Employees will be instructed to use the rack located behind the Gallery.

7. **Management of Employee Parking / Carpool / Metro:** The Kensington's on-site Business Office Manager will have the direct responsibility for managing Transportation Coordination. The Manager's specific tasks will include orienting new employees to alternative travel and available subsidies, managing the system for arranging car pools, managing the ongoing communications for transportation programs via employee bulletin boards, disbursing subsidies, policing adherence to parking policies, and managing the accounting associated with transportation incentives. The executive Director and Business Office Manager will be jointly accountable for coordinating with the City of Falls Church.

8. **Residents:** No residents will park in the building or on the streets in the surrounding area. The prohibition will be written into the resident leases.

9. **Guest and Visitor Parking:** Family members, guests and visitors will be instructed to park under the building as part of the admission process and garage signage at the entrance will be provided welcoming visitors. Spaces available for guest and visitor parking are shown in yellow in the attached parking plan.

10. **Retail Parking:** Retail parking will also be provided under the building and has been considered in the total demand analysis by Shropshire. The Kensington will designate up to 8 spaces for short term retail use during normal business hours of the retail tenants as shown in blue in the attached parking plan.

11. **Handicap Parking:** The applicant has proposed five (5) handicap parking spaces, which will meet or exceed the 2010 ADA Standards for Accessible Design (ADAAG). These are available to retail customers, visitors and employees that qualify under ADA.

12. **Garage Control / Signage:** The entrance and exit from the under building parking area will be from Lee Street as shown on the attached parking plan. A visible blade sign and other directional signage will be designed to direct retail customers and visitors to this parking entrance. This entrance will have an electric gate control that will remain raised from approximately 6 am until 11 pm, 7 days per week. From 11 p.m. until 6 a.m., the gate will be closed for security purposes, and access to the parking area will be controlled by (a) controllers supplied to night shift staff and family members that request them for late night visitation and (b) a call box at the entrance to the garage for guests to use to request entry.

13. **Free Traffic Flow:** The garage has been specifically designed such that traffic flow is a circular one way route that has no dead ends requiring the driver to reverse out of the garage or perform a three point turn around.

14. **Safe Resident Drop Off and Pick Up**: As shown in the parking plan, there is a designated and striped area adjacent to the ground floor lobby for resident drop off and pick up, with adequate clearance for another vehicle to pass.

15. **Full Width Parking Spaces:** As shown on the attached parking plan, 80% of the parking spaces measure at least 9 feet wide in clear width, measured between the face of any columns or obstructions. The other 20% are a full 8.5 feet in width, clear of any columns or other obstructions. The majority of the parking spaces are a full 9 feet wide with no column intrusion. *(Note: This significantly exceeds current City code requirements, which permits 8 ½ foot wide spaces to have up to 1 foot intrusion by columns, resulting in an effective width of 7.5 feet.)*

16. **Illegal Parking / Towing:** Ample signage will be provided that identifies the under building parking as for the benefit of visitors to The Kensington or customers of the retail space. Access to the parking will be restricted at night. In the unlikely event of illegal parking during the day, The Kensington would first notify the City of Falls Church Police Department or follow any other protocol suggested by the City. For repeated offenses or a illegal parked car that creates a safety or security concern, The Kensington will privately contract for the car to be towed.

17. **Emergency Vehicle Clearance and Turning Radii:** The Kensington's parking garage will have a minimum continuous clear height of 11'6" and sufficient turning radii to permit a "Monster Medic" Emergency Response Vehicle to enter and leave the garage in a circular pattern. In addition, the width of the drive aisle in front of the resident lobby (30+ feet) allows for other vehicles to safely go around an emergency vehicle parked at the lobby entrance.

18. **Future Mitigation Measures:** Subsequent to the opening of The Kensington, if it is found by The Kensington or The City that the employee mode share target is not being achieved and that the demand for employee parking exceeds what was anticipated (i.e. 23 spaces), The Kensington will:

    a. Increase the financial incentives in $25 per month increments every six months until the employee target mode share is achieved, and/or

    b. Take other measures that The Kensington may identify to achieve the target employee mode share and parking demand.

I hereby proffer that the development of the subject property shall be in strict accordance with the conditions set forth in this submission.

Harley D. Cook
Authorized Member
The Kensington of Falls Church

WALTER L. PHILLIPS INCORPORATED ESTABLISHED 1945
Engineers • Surveyors • Planners
Landscape Architects • Arborists
207 PARK AVENUE
FALLS CHURCH, VIRGINIA 22046
(703) 532-6163 Fax (703) 533-1301
www.WLPINC.com

COMMONWEALTH OF VIRGINIA
KAREN L. S. WHITE
Lic. No.041850
8/25/14
PROFESSIONAL ENGINEER

SCALE: AS NOTED | DATE: 8/25/14 | DRAWN: | CHECKED:

REVISION APPROVED BY

NO.	DESCRIPTION	DATE	REV. BY	APPROVED	DATE

TRANSPORTATION AND PARKING MANAGEMENT PLAN

THE KENSINGTON OF FALLS CHURCH

700 WEST BROAD STREET
CITY OF FALLS CHURCH, VIRGINIA

SHEET: C-0208

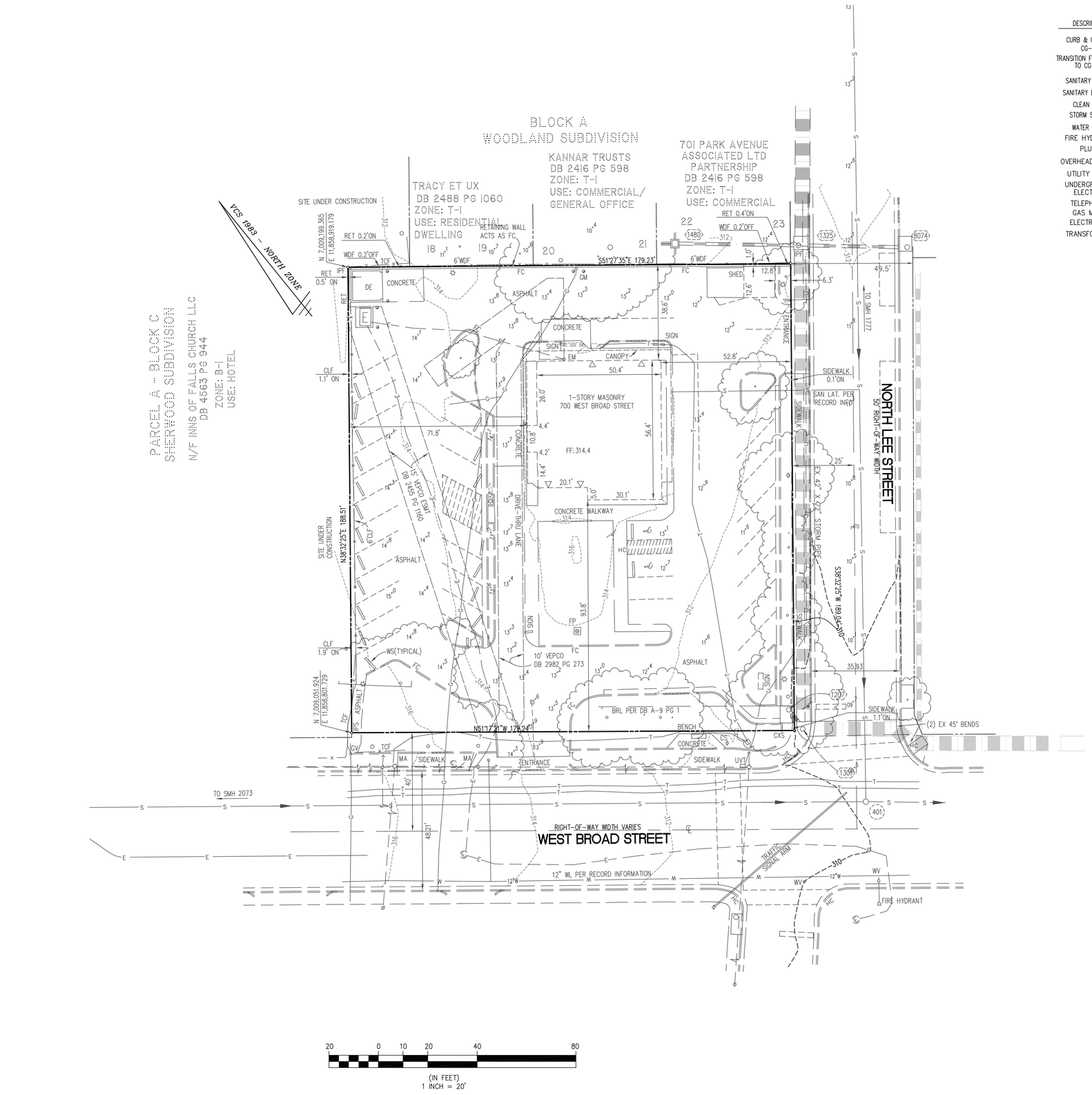

LEGEND

DESCRIPTION	EXISTING
CURB & GUTTER CG-2	
TRANSITION FROM CG-6 TO CG-6R	CG-6 CG-6R
SANITARY SEWER	S
SANITARY LATERAL	SL
CLEAN OUT	C.O.
STORM SEWER	
WATER MAIN	W
FIRE HYDRANT	
PLUG	
OVERHEAD WIRES	
UTILITY POLE	
UNDERGROUND ELECTRIC	UE
TELEPHONE	T
GAS MAIN	G
ELECTRICAL	E
TRANSFORMER	

DESCRIPTION	EXISTING
HANDICAP RAMP (CG-12)	
GUARDRAIL	
FENCE	
TRAFFIC FLOW	
LIGHT	
DOOR	
TREES	
CONTOURS	260 264
SPOT ELEVATION	+264 50
DRAINAGE FLOW DIRECTION	
TOP OF CURB	TC
BOTTOM OF CURB	BC
TOP OF WALL	TW
BOTTOM OF WALL	BW
HIGH POINT	H.P.
FIELD VERIFIED RPA BOUNDARY	
LIMITS OF CLEARING AND GRADING	

STORM SEWER AS-BUILT

SD 1480		
YARD INLET TOP =	311.92	
2-6"PVC IN (WEST) =	309.09	
6" PVC IN (NORTH) =	310.42	
6" PVC IN (SOUTH) =	310.42	
15"RCP OUT (1325) =	307.82	
SD 8074		
CURB INLET TOP =	312.10	
12"CMP IN (EAST) =	310.22	
15"RCP OUT (1325) =	309.55	
SD 1325		
CURB INLET TOP =	312.27	
15"RCP IN (1480) =	307.72	
15"RCP IN (8074) =	308.91	
42X72CMP IN(NORTH) =	306.54	
42X72CMP OUT(1301) =	306.51	
SD 1207		
CURB INLET TOP =	310.94	
15"RCP OUT (1301) =	307.24	
SD 1301		
CURB INLET TOP =	309.86	
15"RCP IN (1207) =	307.06	
42X72CMP IN (1325) =	304.92	
42X72CMP OUT(SOUTH) =	304.74	

SANITARY SEWER AS-BUILT

SMH 1777		
MANHOLE TOP =	315.35	
8" INV IN (1749) =	307.27	
8" INV IN (EAST) =	307.29	
8" INV IN (SOUTH) =	307.68	
8" INV OUT (401) =	305.91	
SMH 2073		
MANHOLE TOP =	320.83	
8" INV IN (2022) =	308.86	***
8" INV IN (SOUTH) =	310.86	***
8" INV OUT (401) =	308.86	***
SMH 401		
MANHOLE TOP =	309.93	
8" INV IN (1777) =	303.43	***
8" INV IN (2073) =	301.58	***
8" INV OUT (SOUTH) =	301.43	***

*** DENOTES RECORD INFORMATION
PIPE SIZES ARE PER RECORD INFORMATION

20 0 10 20 40 80
(IN FEET)
1 INCH = 20'

WALTER L. PHILLIPS INCORPORATED
ESTABLISHED 1945
Engineers • Surveyors • Planners
Landscape Architects • Arborists
207 PARK AVENUE
FALLS CHURCH, VIRGINIA 22046
(703) 532-6163 Fax (703) 533-1301
www.WLPINC.com

CHECKED: KW
DRAWN: BS, AOA
SCALE: 1"=20'
DATE: 8/26/14

COMMONWEALTH OF VIRGINIA
KAREN L. S. WHITE
Lic. No.041850
8/25/14
PROFESSIONAL ENGINEER

NO.	DESCRIPTION	DATE	REV.- BY	APPROVED	DATE

REVISION APPROVED BY

EXISTING CONDITIONS PLAN

THE KENSINGTON OF FALLS CHURCH

700 WEST BROAD STREET
CITY OF FALLS CHURCH, VIRGINIA

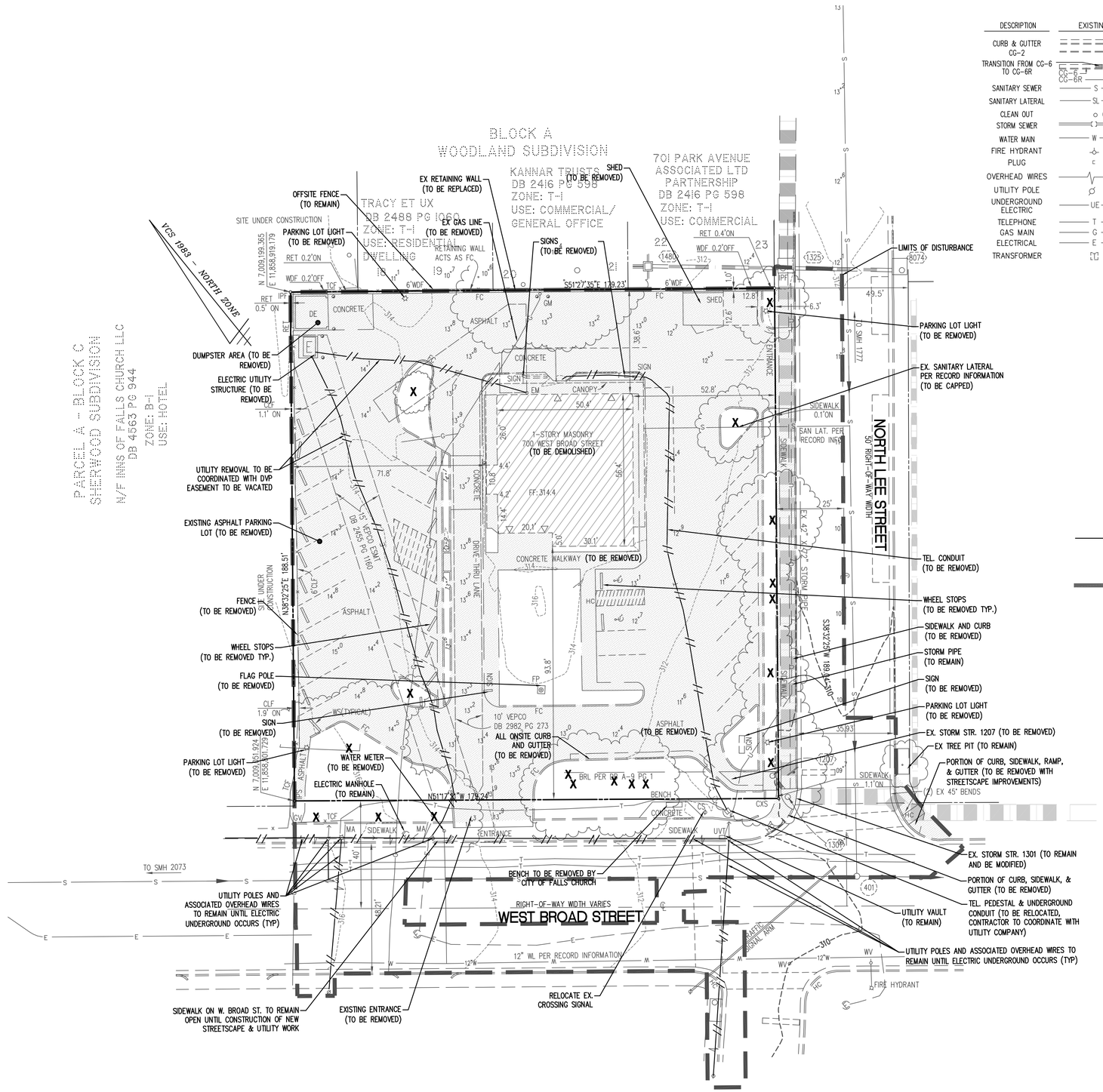

LEGEND

DESCRIPTION	EXISTING
CURB & GUTTER CG-2	
TRANSITION FROM CG-6 TO CG-6R	CG-6 CG-6R
SANITARY SEWER	S
SANITARY LATERAL	SL
CLEAN OUT	C.O.
STORM SEWER	
WATER MAIN	W
FIRE HYDRANT	
PLUG	
OVERHEAD WIRES	
UTILITY POLE	
UNDERGROUND ELECTRIC	UE
TELEPHONE	T
GAS MAIN	G
ELECTRICAL	E
TRANSFORMER	

DESCRIPTION	EXISTING
HANDICAP RAMP (CG-12)	
GUARDRAIL	
FENCE	
TRAFFIC FLOW	
LIGHT	
DOOR	
TREES	
CONTOURS	260 264
SPOT ELEVATION	+264 50
DRAINAGE FLOW DIRECTION	
TOP OF CURB	TC
BOTTOM OF CURB	BC
TOP OF WALL	TW
BOTTOM OF WALL	BW
HIGH POINT	H.P.
FIELD VERIFIED RPA BOUNDARY	
LIMITS OF CLEARING AND GRADING	

DEMO LEGEND

- TO BE REMOVED
- X — TREES TO BE REMOVED
- TO BE DEMOLISHED
- UTILITY TO BE REMOVED OR ABANDONED IN PLACE
- LIMITS OF DISTURBANCE

WALTER L. PHILLIPS INCORPORATED
ESTABLISHED 1945
Engineers • Surveyors • Planners
Landscape Architects • Arborists
207 PARK AVENUE
FALLS CHURCH, VIRGINIA 22046
(703) 532-6163 Fax (703) 533-1301
www.WLPINC.com

CHECKED: KW
DRAWN: BS, AOA
DATE: 8/26/14
SCALE: 1"=20'

COMMONWEALTH OF VIRGINIA
KAREN L. S. WHITE
Lic. No.041850
8/25/14
PROFESSIONAL ENGINEER

REVISION APPROVED BY

NO.	DESCRIPTION	DATE	REV. BY	APPROVED	DATE

DEMOLITION PLAN
THE KENSINGTON OF FALLS CHURCH
700 WEST BROAD STREET
CITY OF FALLS CHURCH, VIRGINIA

SHEET: C-0302

File No. CC-6 Tax Map No. Job No. 13-014 Cadd Dwg. File: Q:\sdskproj\13014\dwg\Engineering\Site Plan\13014C-0302.dwg

STORM SEWER AS-BUILT

SD 1480		
YARD INLET TOP =	311.92	
2-6"PVC IN (WEST) =	309.09	
6" PVC IN (NORTH) =	310.42	
6" PVC IN (SOUTH) =	310.42	
15"RCP OUT (1325) =	307.82	
SD 8074		
CURB INLET TOP =	312.10	
12"CMP IN (EAST) =	310.22	
15"RCP OUT (1325) =	309.55	
SD 1325		
CURB INLET TOP =	312.27	
15"RCP IN (1480) =	307.72	
15"RCP IN (8074) =	308.91	
42X72CMP IN(NORTH) =	306.54	
42X72CMP OUT(1301) =	306.51	
SD 1207		
CURB INLET TOP =	310.94	
15"RCP OUT (1301) =	307.24	
SD 1301		
CURB INLET TOP =	309.86	
15"RCP IN (1207) =	307.06	
42X72CMP IN (1325) =	304.92	
42X72CMP OUT(SOUTH) =	304.74	

SANITARY SEWER AS-BUILT

SMH 1777		
MANHOLE TOP =	315.35	
8" INV IN (1749) =	307.27	
8" INV IN (EAST) =	307.29	
8" INV IN (SOUTH) =	307.68	
8" INV OUT (401) =	305.91	
SMH 2073		
MANHOLE TOP =	320.83	
8" INV IN (2022) =	308.86	***
8" INV IN (SOUTH) =	310.86	***
8" INV OUT (401) =	308.86	***
SMH 401		
MANHOLE TOP =	309.93	
8" INV IN (1777) =	303.43	***
8" INV IN (2073) =	301.58	***
8" INV OUT (SOUTH) =	301.43	***

*** DENOTES RECORD INFORMATION
PIPE SIZES ARE PER RECORD INFORMATION

LEGEND

DESCRIPTION	EXISTING
CURB & GUTTER CG-2	
TRANSITION FROM CG-6 TO CG-6R	CG-2 CG-6 CG-6R
SANITARY SEWER	S
SANITARY LATERAL	SL
CLEAN OUT	C.O.
STORM SEWER	
WATER MAIN	W
FIRE HYDRANT	
PLUG	
OVERHEAD WIRES	
UTILITY POLE	
UNDERGROUND ELECTRIC	UE
TELEPHONE	T
GAS MAIN	G
ELECTRICAL	E
TRANSFORMER	
HANDICAP RAMP (CG-12)	
GUARDRAIL	
FENCE	
TRAFFIC FLOW	
LIGHT	
DOOR	
TREES	
CONTOURS	260 264
SPOT ELEVATION	+264.50
DRAINAGE FLOW DIRECTION	
TOP OF CURB	TC
BOTTOM OF CURB	BC
TOP OF WALL	TW
BOTTOM OF WALL	BW
HIGH POINT	H.P.

NOTES:

1. THE PROPERTY SHOWN HEREON IS DESIGNATED BY THE CITY OF FALLS CHURCH, VIRGINIA, AS REAL PROPERTY CODE (RPC) NUMBER 51-131-003 AND 51-131-005 AND IS ZONED B-1
2. THE PROPERTY IS NOW IN THE NAME OF FALLS CHURCH 316, LLC AS RECORDED IN DEED BOOK 4586 AT PAGE 2680 AMONG THE LAND RECORDS OF ARLINGTON COUNTY, VIRGINIA.
3. THIS PLAT AND THE SURVEY UPON WHICH IT IS BASED SHOWS ONLY THOSE IMPROVEMENTS THAT ARE OBSERVABLE AND CAN BE LOCATED USING NORMAL SURVEY METHODS. THE UNDERGROUND UTILITIES SHOWN HAVE BEEN LOCATED FROM FIELD SURVEY INFORMATION, MISS UTILITY MARKINGS AND EXISTING RECORDS. THERE ARE NO GUARANTEES, EITHER EXPRESS OR IMPLIED, THAT THE UNDERGROUND UTILITIES SHOWN COMPRISE ALL SUCH UTILITIES IN THE AREA, EITHER IN SERVICE OR ABANDONED, OR THAT THE UNDERGROUND UTILITIES SHOWN ARE IN THE EXACT LOCATION INDICATED. THE UNDERGROUND UTILITIES HAVE NOT BEEN PHYSICALLY LOCATED.
4. TOTAL AREA OF THE PROPERTY IS 33,835 SQUARE FEET OR 0.7768 ACRES.
5. THIS PLAT IS BASED ON A CURRENT FIELD SURVEY BY THIS FIRM.
6. THE FEDERAL EMERGENCY MANAGEMENT AGENCY'S FLOOD INSURANCE RATE MAP FOR THE CITY OF FALLS CHURCH, VIRGINIA, MAP NUMBER 5100540001C, REVISED DATE JULY 16, 2004, DESIGNATES THE PROPERTY AS BEING IN ZONE X, "AREAS DETERMINED TO BE OUTSIDE THE 0.2% ANNUAL CHANCE FLOODPLAIN."
7. EASEMENTS, CONDITIONS, COVENANTS AND RESTRICTIONS, SHOWN AND/OR NOTED, TAKEN FROM THE TITLE COMMITMENT ISSUED BY FIRST AMERICAN TITLE INSURANCE COMPANY, COMMITMENT NUMBER NCS 588492-DC72 DATED JANUARY 23, 2013.
8. THE PROPERTY SHOWN HEREON IS REFERENCED TO THE NORTH AMERICAN VERTICAL DATUM OF 1929 AS COMPUTED FROM A FIELD RUN VERTICAL CONTROL SURVEY AND IS REFERENCED TO THE VIRGINIA COORDINATE SYSTEM OF 1983, [NAD 83(2011)(EPOCH:2010.0000)] AS COMPUTED FROM A FIELD RUN HORIZONTAL SURVEY WHICH TIES THIS PROPERTY'S BOUNDARY TO NOAA/NGS MONUMENT PID NUMBER DH4144; LWXI STERLING CORS ARP. THE SCALE FACTOR (ELEVATION FACTOR X GRID FACTOR) WHICH HAS BEEN APPLIED TO THE FIELD DISTANCES TO DERIVE THE REFERENCED COORDINATES IS 0.99995950. THE FOOT DEFINITION USED FOR CONVERSION OF THE MONUMENT COORDINATES AND IN THE PERFORMANCE OF THE FIELD SURVEY IS THE U.S. SURVEY FOOT. CONTOUR INTERVAL IS TWO FEET.
9. THIS SURVEY WAS COMPLETED UNDER THE DIRECT AND RESPONSIBLE CHARGE OF, JAMES A. MADISON, JR., L.S., FROM AN ACTUAL [X] GROUND OR [ ] AIRBORNE SURVEY MADE UNDER MY SUPERVISION; THAT THE IMAGERY AND/OR ORIGINAL DATA WAS OBTAINED ON MARCH 1, 2013, 2012; AND THAT THIS PLAT, MAP, OR DIGITAL GEOSPATIAL DATA INCLUDING METADATA MEETS MINIMUM ACCURACY STANDARDS UNLESS OTHERWISE NOTED.
10. THIS SURVEY WAS PERFORMED AT THE REQUEST OF KENSINGTON SENIOR DEVELOPMENT, LLC.
11. NO VISIBLE EVIDENCE WAS FOUND OF: EARTH MOVING WORK; BUILDING CONSTRUCTION OR BUILDING ADDITIONS WITHIN RECENT MONTHS; THE PROPERTY BEING USED AS A SOLID WASTE DUMP, SUMP OR SANITARY LANDFILL; A CEMETERY ON THIS SITE.
12. PROP. EASEMENT FOR STREETLIGHT CONNECTION WITHIN CONDUIT LIMITS.

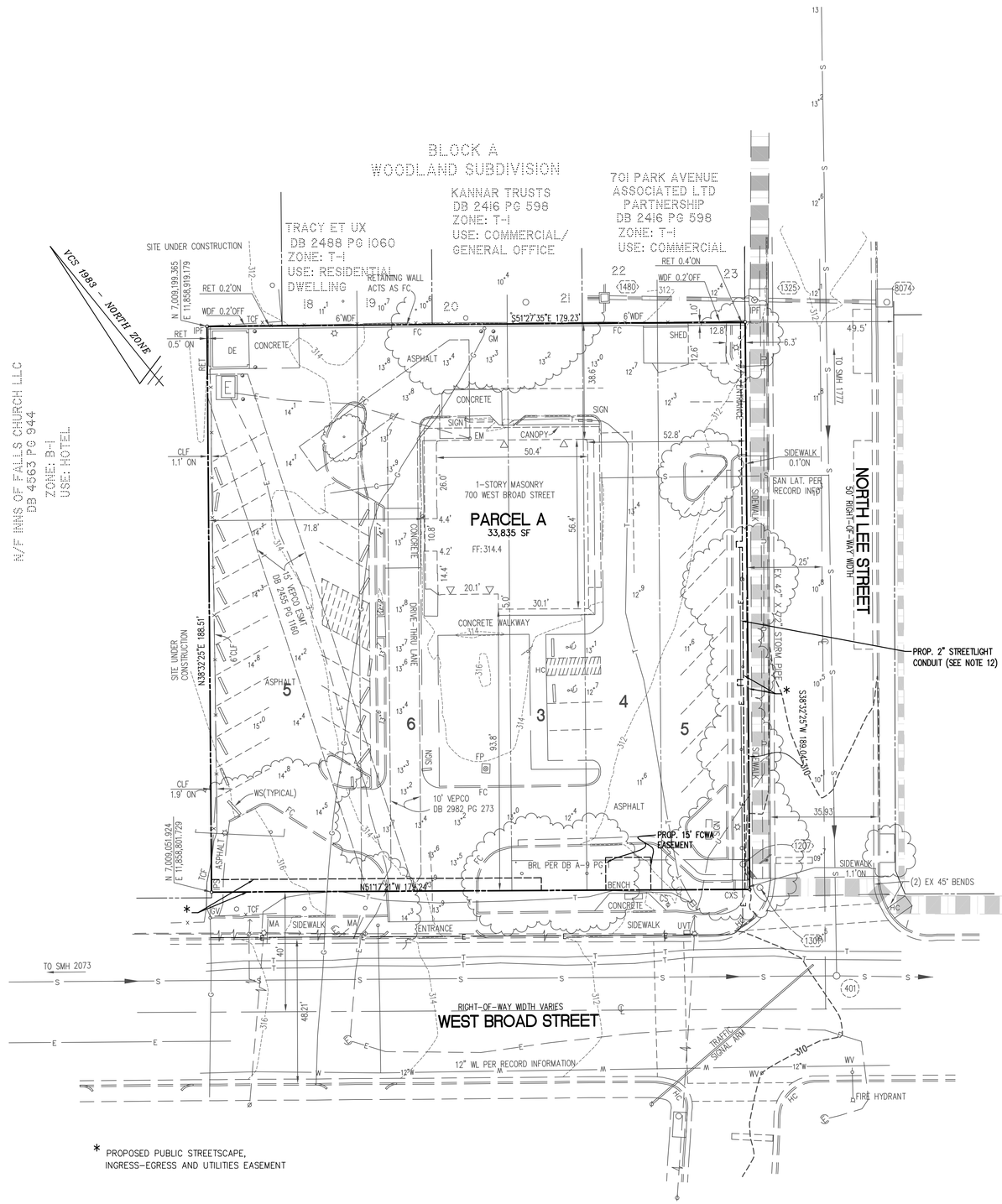

* PROPOSED PUBLIC STREETSCAPE, INGRESS-EGRESS AND UTILITIES EASEMENT

20 0 10 20 40 80
(IN FEET)
1 INCH = 20'

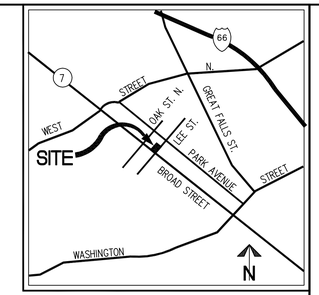

VICINITY MAP SCALE: 1"=2000'

OWNER/SUBDIVIDER INFORMATION

THE KENSINGTON OF FALLS CHURCH, LLC (THE CONTRACT PURCHASER)
11921 FREEDOM DRIVE
SUITE 950
RESTON, VA 20190

PROPOSED AREA TABULATION
PARCEL A 33,835 SF OR 0.7768 AC.

EXISTING AREA TABULATION
51-131-003..... 14,969 SF OR 0.3436 AC
(LOTS 3, 4 & 5)
51-131-005..... 18,866 SF OR 0.4331 AC
(LOTS 5 & 6)
TOTAL..... 33,835 SF OR 0.7768 AC

CONSOLIDATION OF BLOCK C, LOTS 5 AND 6, AS RECORDED IN DEED BOOK K-5 AT PAGE 674 AND THE RESIDUE OF WOODLAND SUBDIVISION, BLOCK A, LOTS 3, 4, AND 5, AS RECORDED IN DEED BOOK Z-8 AT PAGE 528, CITY OF FALLS CHURCH, VIRGINIA

WALTER L. PHILLIPS INCORPORATED
ESTABLISHED 1945
Engineers • Surveyors • Planners
Landscape Architects • Arborists
207 PARK AVENUE
FALLS CHURCH, VIRGINIA 22046
(703) 532-6163 Fax (703) 533-1301
www.WLPINC.com

DRAWN: BS, AOA
CHECKED: KW
SCALE: 1"=20'
DATE: 8/26/14

COMMONWEALTH OF VIRGINIA
KAREN L. S. WHITE
Lic. No.041850
8/25/14
PROFESSIONAL ENGINEER

REVISION APPROVED BY			
NO.	DESCRIPTION	DATE	REV. BY	APPROVED	DATE

PRELIMINARY SUBDIVISION PLAT
THE KENSINGTON OF FALLS CHURCH
700 WEST BROAD STREET
CITY OF FALLS CHURCH, VIRGINIA

File No. CC-6 Tax Map No. Job No. 13-014 Cadd Dwg. File: Q:\sdskproj\13014\dwg\Engineering\Site Plan\13014C-0303.dwg

SHEET: C-0303

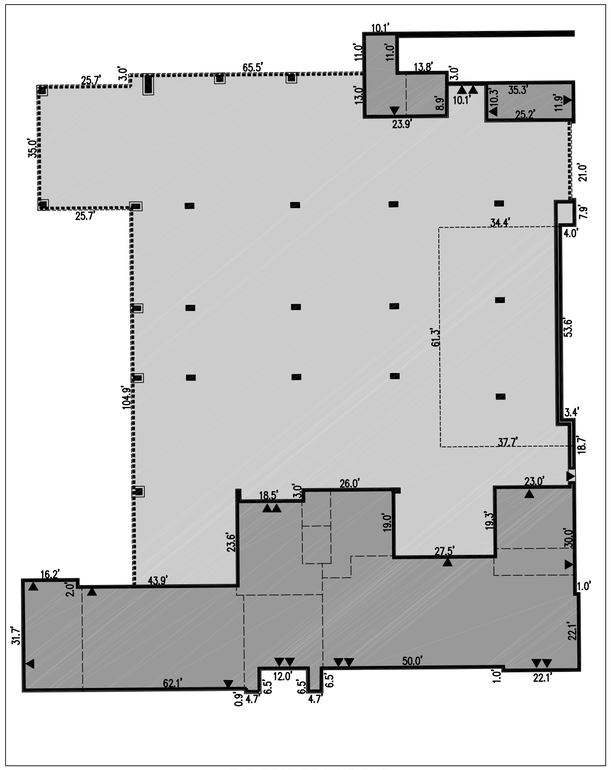

BUILDING DIMENSIONS
1"=20'

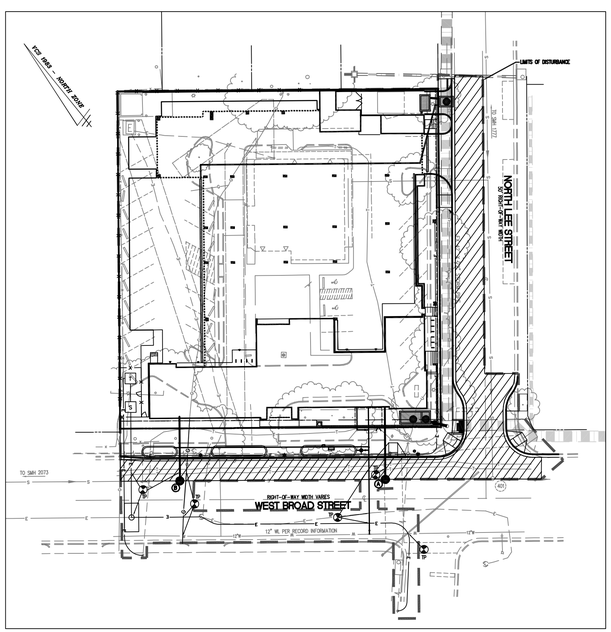

PAVEMENT RESTORATION IN R.O.W.
1"=40'

MILL 2" AND OVERLAY WITH VDOT SM 9.5A
-SOUTHBOUND LANE OF N. LEE ST.
-OUTSIDE WESTBOUND LANE OF W. BROAD ST.
-AREAS SURROUNDING CURB BUMP OUTS

REFER TO PAVEMENT RESTORATION DETAIL FOR ALL OTHER UTILITY WORK (SHEET C-0205)

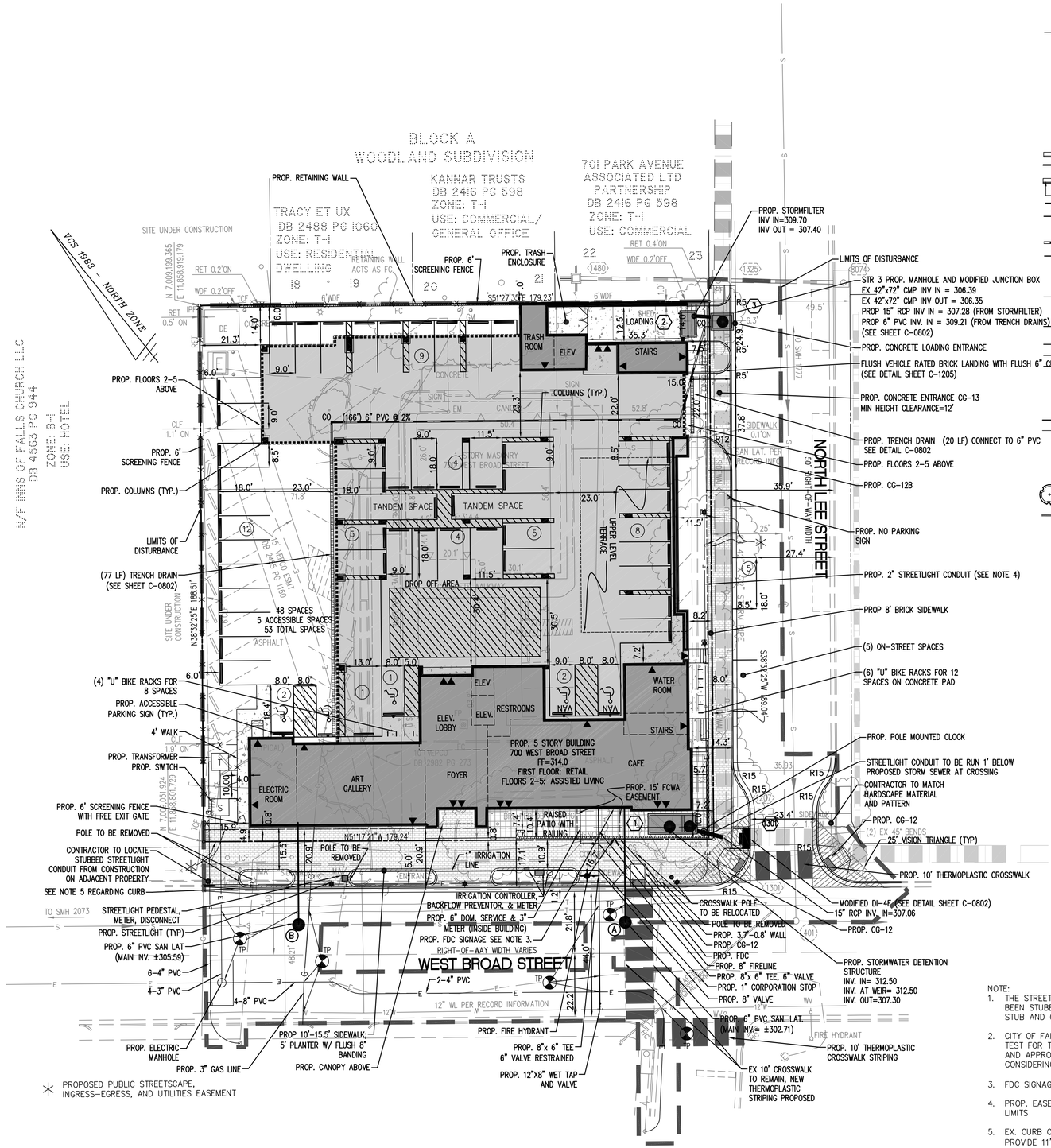

LEGEND

PROPOSED	DESCRIPTION	EXISTING
EP	EDGE OF PAVEMENT	EP.
MH	MANHOLE	MH
WV	WATER VALVE	WV
WM	WATER METER	WM
GM	GAS METER	GM
TCB	TRAFFIC CONTROL BOX	TCB
LP	LIGHT POLE	LP
LP/S	LIGHT POLE WITH SIGNALS	LP/S
	CURB & GUTTER CG-2	
CG-6R CG-6	TRANSITION FROM CG-6 TO CG-6R	CG-6 CG-6R
	SANITARY SEWER	S
SL	SANITARY LATERAL	SL
C.O.	CLEAN OUT	C.O.
	STORM SEWER	
	WATER MAIN	W
	FIRE HYDRANT	
	PLUG	
	OVERHEAD WIRES	
	UTILITY POLE	
UE	UNDERGROUND ELECTRIC	UE
T	TELEPHONE	T
G	GAS MAIN	G
E	ELECTRICAL	E
	TRANSFORMER	
	HANDICAP RAMP (CG-12)	
	GUARDRAIL	
	FENCE	
	TRAFFIC FLOW	
	LIGHT	
	DOOR	
	TREES	
	LIMITS OF CLEARING AND GRADING	
	TEST PIT	

NOTE:
1. THE STREETLIGHT PROVIDED BY ADJACENT CONSTRUCTION HAS BEEN STUBBED FOR CONNECTION. CONTRACTOR TO LOCATE STUB AND CONNECT.
2. CITY OF FALLS CHURCH MUST BE PRESENT AT THE PRESSURE TEST FOR THE STREETSCAPE IRRIGATION, AND ALSO OBSERVE AND APPROVE THE WORKING IRRIGATION SYSTEM BEFORE CONSIDERING THE STREETSCAPE COMPLETED.
3. FDC SIGNAGE AND STROBE TO BE PROVIDED 10-12' ABOVE FDC
4. PROP. EASEMENT FOR STREETLIGHT CONNECTION WITHIN CONDUIT LIMITS
5. EX. CURB ON W. BROAD ST TO BE SHIFTED 0.9 FT SOUTH TO PROVIDE 11' TRAVEL LANES. TRANSITION WITH EX. CURB ON PROPERTY TO THE WEST. PROP. CG-6 WITH MOD. 1.5' GUTTER.
6. THE OWNER IS TO MAINTAIN THE STREETSCAPE IMPROVEMENTS ALONG THE WEST BROAD STREET AND NORTH LEE STREET FRONTAGES OF THE SUBJECT PROPERTY.
7. PROP. ELECTRIC UTILITY WORK TO BE FINALIZED BY DOMINION VIRGINIA POWER DESIGN.

20 0 10 20 40 80
(IN FEET)
1 INCH = 20'

WALTER L. PHILLIPS INCORPORATED
Engineers • Surveyors • Planners
Landscape Architects • Arborists
207 PARK AVENUE
FALLS CHURCH, VIRGINIA 22046
(703) 532-6163 Fax (703) 533-1301
www.WLPINC.com
ESTABLISHED 1945

CHECKED: KW
DRAWN: BS, AOA
SCALE: 1"=20'
DATE: 8/25/14

COMMONWEALTH OF VIRGINIA
KAREN L.S. WHITE
Lic. No.041850
8/25/14
PROFESSIONAL ENGINEER

REVISION APPROVED BY				
NO.	DESCRIPTION	DATE	REV. BY	APPROVED	DATE

LAYOUT PLAN
THE KENSINGTON OF FALLS CHURCH
700 WEST BROAD STREET
CITY OF FALLS CHURCH, VIRGINIA

SHEET: C-0401

File No. CC-6 Tax Map No. Job No. 13-014 Cadd Dwg. File: Q:\sdskproj\13014\dwg\Engineering\Site Plan\13014C-0401.dwg

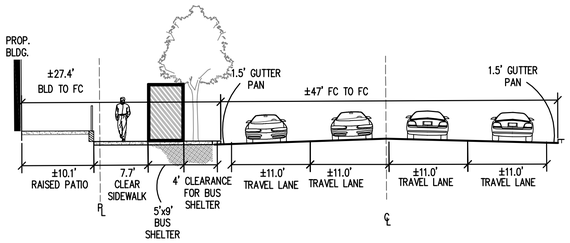

PROPOSED STREET SECTION A-A

SCALE: 1"=20'

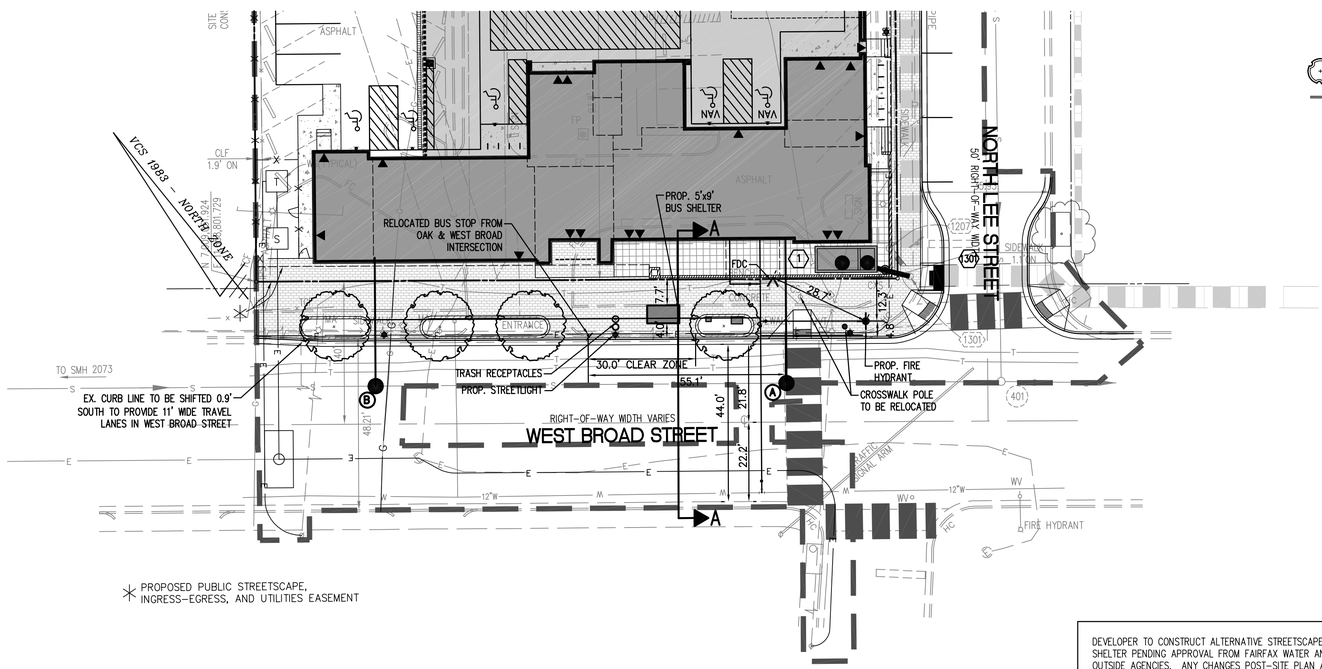

PLAN VIEW

SCALE: 1"=20'

DEVELOPER TO CONSTRUCT ALTERNATIVE STREETSCAPE WITH BUS SHELTER PENDING APPROVAL FROM FAIRFAX WATER AND WMATA OUTSIDE AGENCIES. ANY CHANGES POST-SITE PLAN APPROVAL RELATING TO THE BUS STOP TO BE ADMINISTRATIVELY APPROVED VIA SITE PLAN AMENDMENT

LEGEND

PROPOSED	DESCRIPTION	EXISTING
EP	EDGE OF PAVEMENT	EP.
MH	MANHOLE	MH
WV	WATER VALVE	WV
WM	WATER METER	WM
GM	GAS METER	GM
TCB	TRAFFIC CONTROL BOX	TCB
LP	LIGHT POLE	LP
LP/S	LIGHT POLE WITH SIGNALS	LP/S
	CURB & GUTTER CG-2	
CG-6R CG-6	TRANSITION FROM CG-6 TO CG-6R	CG-6T CG-6 CG-6R
	SANITARY SEWER	S
SL	SANITARY LATERAL	SL
C.O.	CLEAN OUT	C.O.
	STORM SEWER	
	WATER MAIN	W
	FIRE HYDRANT	
	PLUG	
	OVERHEAD WIRES	
	UTILITY POLE	
UE	UNDERGROUND ELECTRIC	UE
T	TELEPHONE	T
G	GAS MAIN	G
E	ELECTRICAL	E
	TRANSFORMER	
	HANDICAP RAMP (CG-12)	
	GUARDRAIL	
	FENCE	
	TRAFFIC FLOW	
	LIGHT	
	DOOR	
	TREES	
	LIMITS OF CLEARING AND GRADING	
	TEST PIT	

20 0 10 20 40 80

(IN FEET)
1 INCH = 20'

WALTER L. PHILLIPS INCORPORATED
ESTABLISHED 1945
Engineers • Surveyors • Planners
Landscape Architects • Arborists
207 PARK AVENUE
FALLS CHURCH, VIRGINIA 22046
(703) 532-6163 Fax (703) 533-1301
www.WLPINC.com

DRAWN: BS, AOA
CHECKED: KW
SCALE: 1"=20'
DATE: 8/26/14

COMMONWEALTH OF VIRGINIA
KAREN L. S. WHITE
Lic. No.041850
8/25/14
PROFESSIONAL ENGINEER

REVISION APPROVED BY

NO.	DESCRIPTION	DATE	REV. BY	APPROVED	DATE

WEST BROAD ST. ALTERNATIVE BUS STOP DESIGN

THE KENSINGTON OF FALLS CHURCH

700 WEST BROAD STREET
CITY OF FALLS CHURCH, VIRGINIA

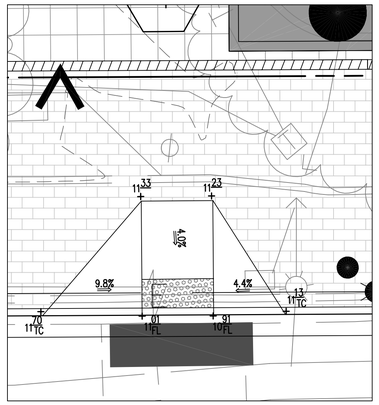

RAMP A ENLARGEMENT
SCALE: 1"=5'

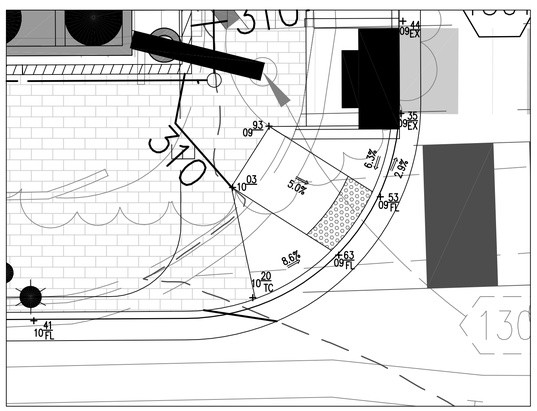

RAMP B ENLARGEMENT
SCALE: 1"=5'

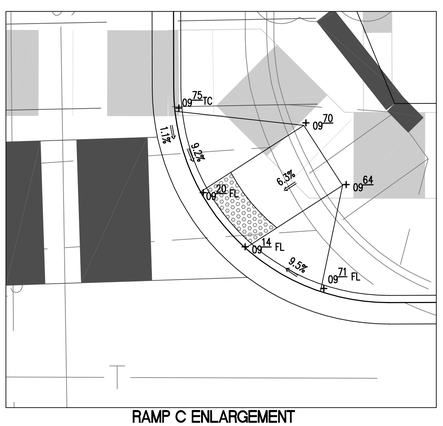

RAMP C ENLARGEMENT
SCALE: 1"=5'

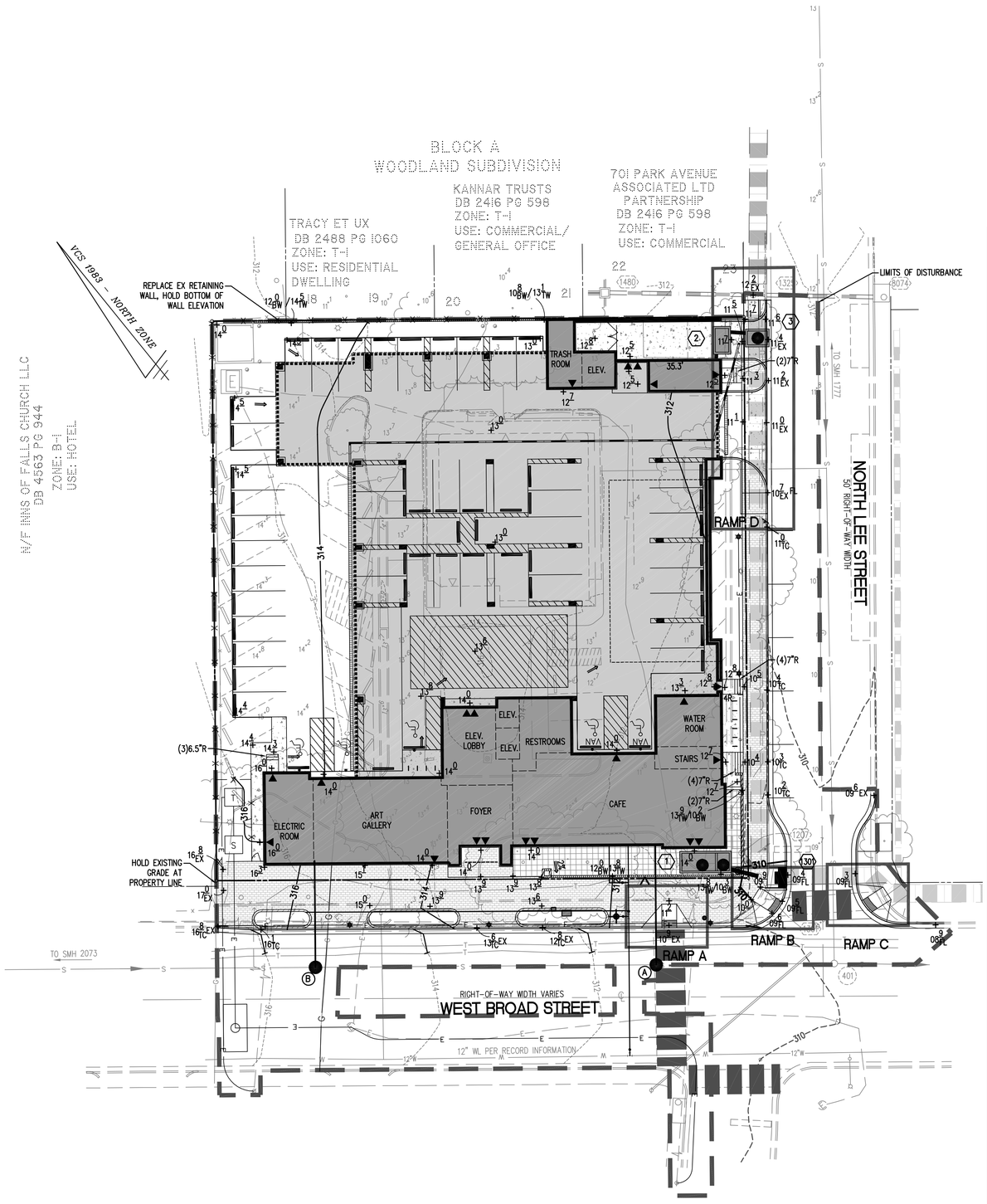

NOTE:
MAX CROSS SLOPE 2% IN SIDEWALK

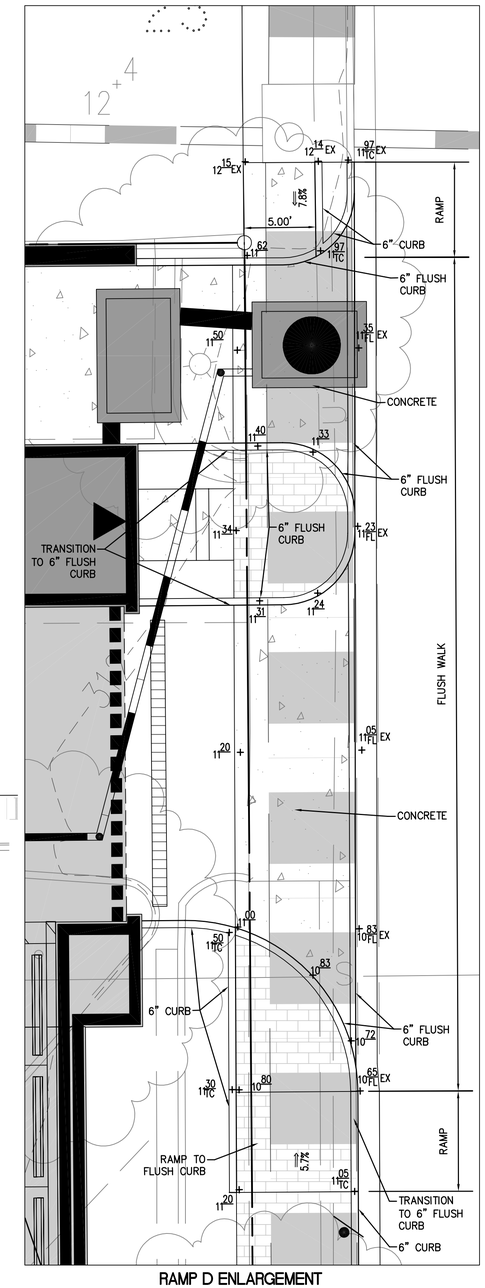

RAMP D ENLARGEMENT
SCALE: 1"=5'

WALTER L. PHILLIPS INCORPORATED
ESTABLISHED 1945
Engineers • Surveyors • Planners
Landscape Architects • Arborists
207 PARK AVENUE
FALLS CHURCH, VIRGINIA 22046
(703) 532-6163 Fax (703) 533-1301
www.WLPINC.com

DRAWN: BS, AOA
CHECKED: KW

SCALE: AS NOTED
DATE: 8/26/14

COMMONWEALTH OF VIRGINIA
KAREN L. S. WHITE
Lic. No.041850
8/25/14
PROFESSIONAL ENGINEER

REVISION APPROVED BY

NO.	DESCRIPTION	DATE	REV. BY	APPROVED	DATE

GRADING PLAN

THE KENSINGTON OF FALLS CHURCH

700 WEST BROAD STREET
CITY OF FALLS CHURCH, VIRGINIA

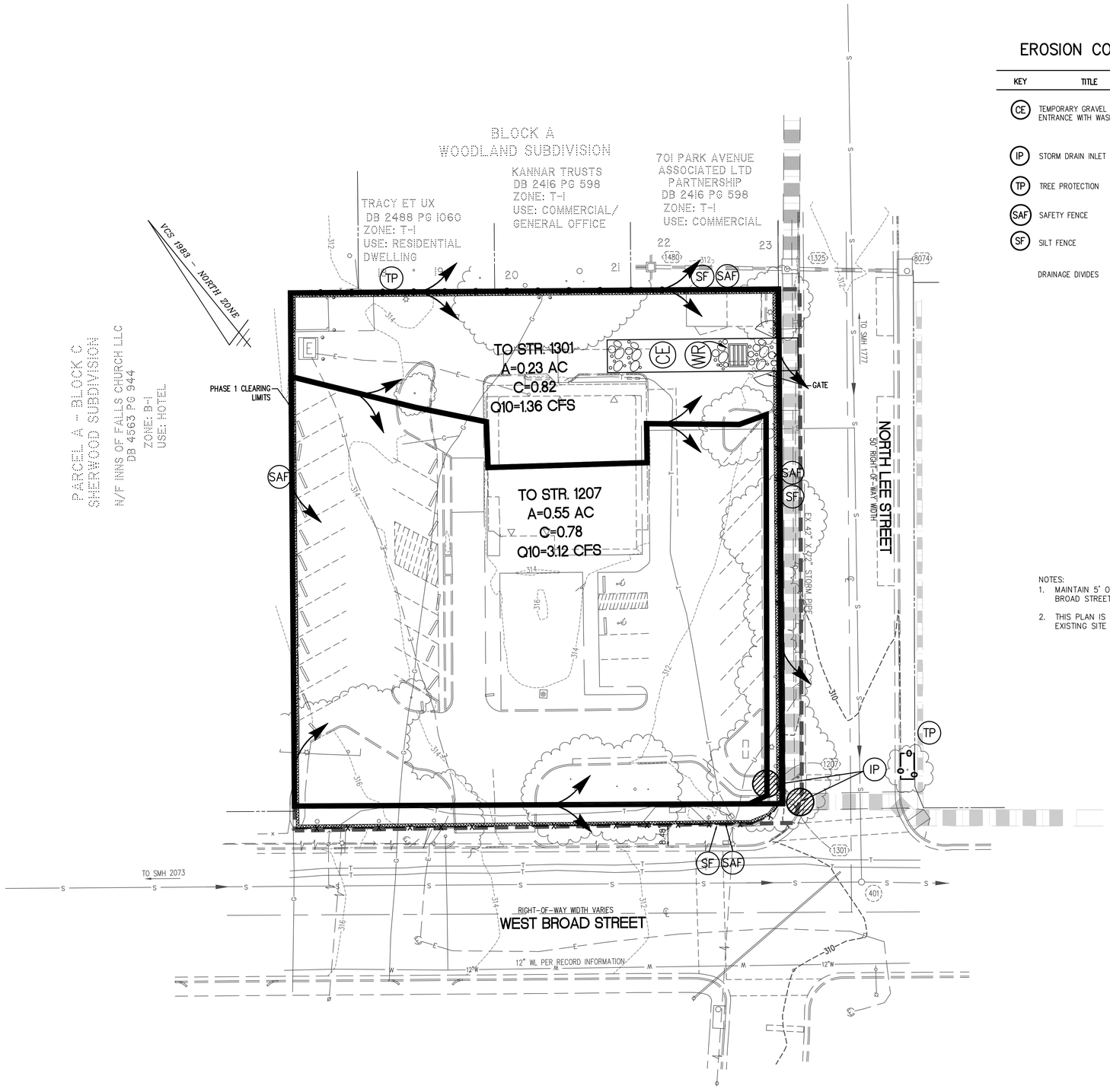

EROSION CONTROL LEGEND

KEY	TITLE	SYMBOL
CE	TEMPORARY GRAVEL CONSTRUCTION ENTRANCE WITH WASH RACK	
IP	STORM DRAIN INLET PROTECTION	
TP	TREE PROTECTION	
SAF	SAFETY FENCE	
SF	SILT FENCE	
	DRAINAGE DIVIDES	

NOTES:
1. MAINTAIN 5' OF SIDEWALK ALONG WEST BROAD STREET.
2. THIS PLAN IS FOR THE DEMOLITION OF EXISTING SITE FEATURES.

20 0 10 20 40 80
(IN FEET)
1 INCH = 20'

WALTER L. PHILLIPS INCORPORATED
ESTABLISHED 1945
Engineers • Surveyors • Planners
Landscape Architects • Arborists
207 PARK AVENUE
FALLS CHURCH, VIRGINIA 22046
(703) 532-6163 Fax (703) 533-1301
www.WLPINC.com

DRAWN: BS, AOA
CHECKED: KW

COMMONWEALTH OF VIRGINIA
KAREN L. S. WHITE
Lic. No.041850
8/25/14
PROFESSIONAL ENGINEER

SCALE: 1"=20'
DATE: 8/26/14

REVISION APPROVED BY			
NO.	DESCRIPTION	DATE	REV. BY	APPROVED	DATE

EROSION & SEDIMENT CONTROL PLAN - PHASE 1

THE KENSINGTON OF FALLS CHURCH

700 WEST BROAD STREET
CITY OF FALLS CHURCH, VIRGINIA

SHEET: C-0601

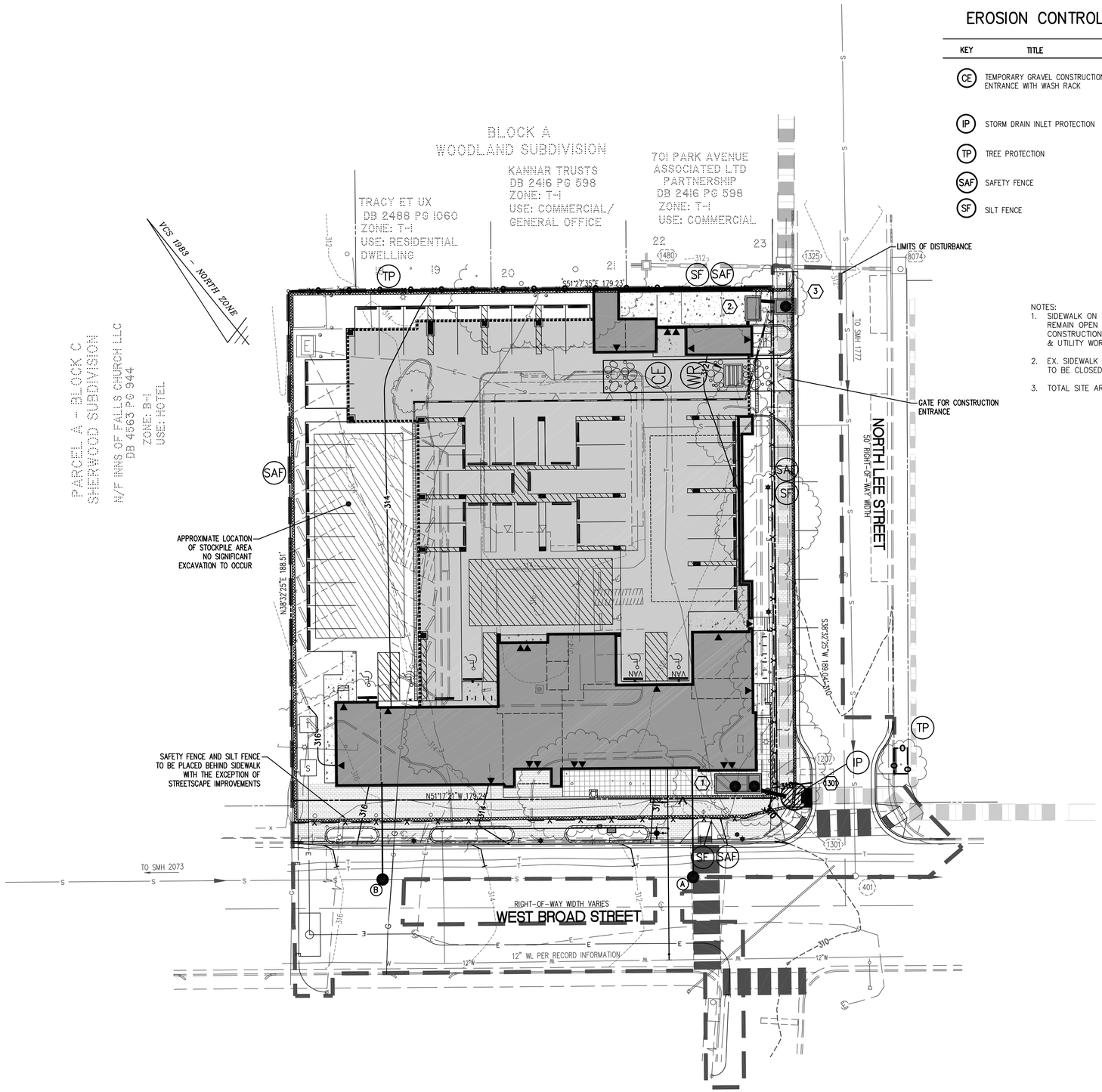

EROSION CONTROL LEGEND

KEY	TITLE	SYMBOL
CE	TEMPORARY GRAVEL CONSTRUCTION ENTRANCE WITH WASH RACK	
IP	STORM DRAIN INLET PROTECTION	
TP	TREE PROTECTION	
SAF	SAFETY FENCE	
SF	SILT FENCE	

NOTES:
1. SIDEWALK ON W. BROAD STREET TO REMAIN OPEN EXCEPT FOR CONSTRUCTION OF NEW STREETSCAPE & UTILITY WORK AS NECESSARY.
2. EX. SIDEWALK ON NORTH LEE STREET TO BE CLOSED DURING CONSTRUCTION.
3. TOTAL SITE AREA < 1 ACRE

WALTER L. PHILLIPS INCORPORATED
ESTABLISHED 1945
Engineers • Surveyors • Planners
Landscape Architects • Arborists
207 PARK AVENUE
FALLS CHURCH, VIRGINIA 22046
(703) 532-6163 Fax (703) 533-1301
www.WLPINC.com

DRAWN: BS, AOA
CHECKED: KW
SCALE: 1"=20'
DATE: 8/25/14

COMMONWEALTH OF VIRGINIA
KAREN L. S. WHITE
Lic. No.041850
8/25/14
PROFESSIONAL ENGINEER

REVISION APPROVED BY

NO.	DESCRIPTION	DATE	REV. BY	APPROVED	DATE

EROSION AND SEDIMENT CONTROL PLAN - PHASE 2

THE KENSINGTON OF FALLS CHURCH

700 WEST BROAD STREET
CITY OF FALLS CHURCH, VIRGINIA

SHEET: C-0602

EROSION CONTROL NARRATIVE

PROJECT DESCRIPTION:
THE PURPOSE OF THIS PROJECT IS TO CONSTRUCT A MIXED USE RETAIL/COMMERCIAL/ASSISTED LIVING FACILITY WITH A SURFACE PARKING LOT. CONSTRUCTION WILL ENTAIL APPROXIMATELY 50,905 SF OF DISTURBED AREA. OFFSITE CONSTRUCTION WILL BE LIMITED TO ROAD, SIDEWALK AND STREETSCAPE CONSTRUCTION, AND INSTALLATION OF UTILITY CONNECTIONS AND NEW UTILITY LINES IN WEST BROAD STREET, AND NORTH LEE STREET.

EXISTING SITE CONDITIONS:
THE EXISTING SITE IS CURRENTLY DEVELOPED WITH A BUILDING THAT ARE USED AS A BURGER KING DRIVE THROUGH RESTAURANT, LARGE ASPHALT PARKING AREAS, LANDSCAPE ISLANDS, AND SIDEWALK. THE GRADES ON AVERAGE ARE 2.1% ACROSS THE ENTIRE SITE.

ADJACENT PROPERTIES:
NORTH: OFFICE USE STRUCTURES
WEST: A NEW HOTEL
SOUTH: WEST BROAD STREET
EAST: NORTH LEE STREET

SOILS:
SEE THIS SHEET FOR SOILS MAP

CRITICAL EROSION AREAS:
NO PART OF THE SITE IS CONSIDERED A CRITICAL EROSION HAZARD.

PHASING NARRATIVE:
THE FOLLOWING EROSION AND SEDIMENT CONTROL MEASURES WILL BE ACCOMPLISHED IN TWO PHASES. PHASE I SHALL BE IN PLACE PRIOR TO CLEARING AND SHALL REMAIN IN PLACE THROUGHOUT THE CLEARING AND LAND DISTURBING PROCESS. THE GENERAL CONTRACTOR IS TO PROVIDE DUST CONTROL THROUGHOUT LAND DISTURBING ACTIVITIES IN ACCORDANCE WITH VESCH STANDARD 3.39.

PHASE 1:
AS THE FIRST ITEM OF CONSTRUCTION, THE CONTRACTOR IS TO PLACE THE SILT FENCE, SAFETY FENCE PERIMETER CONTROL AROUND THE SITE, AND INLET PROTECTION. REFER TO EROSION AND SEDIMENT CONTROL PLAN– PHASE 1 FOR LOCATION OF THESE MEASURES. THIS ACTIVITY IS TO BE FOLLOWED BY THE PLACEMENT OF THE CONSTRUCTION ENTRANCE AND TEMPORARY WATER SERVICE AS COORDINATED WITH CFC PUBLIC UTILITIES. CONSTRUCTION VEHICLES TO LEAVE THE SITE VIA NORTH LEE STREET. A SPRAY NOZZLE IS TO BE PROVIDED ADJACENT TO THE CONSTRUCTION ENTRANCE TO CLEAN CONSTRUCTION VEHICLES BEFORE THEY ENTER THE PUBLIC RIGHT–OF–WAY. THE CONTRACTOR IS TO MAINTAIN ADJACENT ROADWAYS AND PARKING AREAS IN A MUD AND DUST FREE CONDITION. FOLLOWING INSTALLATION OF PHASE 1 CONTROLS, THE CONTRACTOR IS TO SCHEDULE CITY INSPECTION. FOLLOWING INSPECTOR APPROVAL, SITE DEMOLITION, CLEARING AND GRADING MAY PROCEED. AS NOTED ON THE PLAN, DISTURBANCE WITHIN THE RPA AND FLOOD PLAIN ARE LIMITED DURING THIS PHASE.

EXISTING IMPROVEMENTS WITHIN EROSION CONTROL PHASE 1 LIMITS OF DISTURBANCE TO BE CLEARED AS FOLLOWS:
1. EXISTING BUILDINGS AND UTILITY SERVICES TO BE REMOVED PER DEMOLITION PLAN.
2. TREES TO BE CLEARED PER DEMOLITION AND LANDSCAPE CONSERVATION PLANS.

PHASE 2:
INLET PROTECTION FROM PHASE 1 SHALL REMAIN AS SHOWN ON THE PHASE 2 E&S PLAN. INLET PROTECTION SHALL BE REMOVED FROM STRUCTURE 1207 AS THE STRUCTURE REMOVED. SAFETY FENCE TO BE PROVIDED AROUND THE SITE PERIMETER AS SHOWN ON THE PHASE 2 E&S PLAN. UTILITY IMPROVEMENTS WILL TAKE PLACE IN WEST BROAD ST. EROSION AND SEDIMENT CONTROLS ARE TO BE ADJUSTED AS REQUIRED BY THE SITE CONSTRUCTION OR AS DIRECTED BY THE INSPECTOR.

IN ORDER TO ENSURE THAT THE STORMFILTER (STRUCTURE 2) DOES NOT GET CLOGGED DURING CONSTRUCTION, THE STORMFILTER SYSTEM IS TO REMAIN OFFLINE UNTIL THE END OF CONSTRUCTION.

PERMANENT STABILIZATION:
PERMANENT SOIL STABILIZATION SHALL BE IN ACCORDANCE TO VESCH SECTIONS 3.29 TO 3.36. ANY SOIL NOT TO BE BROUGHT TO FINAL GRADE FOR MORE THAN 30 DAYS IS TO BE SEEDED AND MULCHED. THIS IS TO INCLUDE ANY DENUDED AREAS OR STOCKPILES, AND AREAS LEFT DORMANT OR NOT BROUGHT TO FINAL GRADE SHALL BE PERMANENTLY SEEDED AND MULCHED.

ALL STORM AND SANITARY LINES NOT IN THE STREET SHALL BE MULCHED AND SEEDED WITHIN 7 DAYS AFTER BACKFILL, NO MORE THAN 500 FEET SHALL BE OPEN AT ANY ONE TIME. ELECTRIC, TELEPHONE, CABLE, AND GAS UTILITY TRENCHES SHALL BE COMPACTED, SEEDED, MULCHED WITHIN FIVE DAYS AFTER BACKFILL.

NO DISTURBED AREA WILL BE DENUDED FOR MORE THAN 7 CALENDAR DAYS UNLESS IT IS AN ACTIVE WORK AREA OR OTHERWISE AUTHORIZED BY THE ARLINGTON CO. INSPECTOR.

DURING CONSTRUCTION OF THE PROJECT, SOIL STOCKPILES SHALL BE IMMEDIATELY STABILIZED OR PROTECTED WITH SEDIMENT TRAPPING MEASURES. THE CONTRACTOR IS RESPONSIBLE FOR TEMPORARY PROTECTION AND PERMANENT STABILIZATION OF ALL SOIL STOCKPILES ON SITE AS WELL AS BORROW AREAS AND SOIL INTENTIONALLY TRANSPORTED FROM THE PROJECT SITE.

DEWATERING NOTE:
RAINWATER/GROUNDWATER ACCUMULATION FROM WITHIN THE EXCAVATION IS TO BE PUMPED OUT, AS NECESSARY. DURING DEWATERING OPERATIONS, WATER WILL BE PUMPED INTO AN APPROVED FILTERING DEVICE.

MAINTENANCE PROGRAM:
THE SITE SUPERINTENDENT, OR HIS/HER REPRESENTATIVE, SHALL MAKE A VISUAL INSPECTION OF ALL MECHANICAL CONTROLS AND NEWLY STABILIZED AREAS (I.E. SEEDED AND MULCHED AREAS) ON A DAILY BASIS, ESPECIALLY AFTER A HEAVY RAINFALL EVENT TO INSURE THAT ALL CONTROLS ARE MAINTAINED AND PROPERLY FUNCTIONING. ANY DAMAGED CONTROLS SHALL BE REPAIRED PRIOR TO THE END OF THE WORK DAY INCLUDING RE–SEEDING AND MULCHING IF NECESSARY.

EROSION AND SEDIMENT CONTROL MEASURES:

1. ALL EROSION AND SILTATION CONTROL MEASURES ARE TO BE PLACED PRIOR TO LAND DISTURBANCE ACTIVITY, FOLLOWING THE IMPLEMENTATION OF TREE PRESERVATION MEASURES.
2. SEDIMENT AND EROSION CONTROL MEASURES SHALL BE MAINTAINED UNTIL ALL GROUND DISTURBING ACTIVITY CEASES AND PERMANENT STABILIZATION OF ALL DISTURBED AREAS IS COMPLETE.
3. ALL STANDARDS AND SPECIFICATIONS REFER TO THE VIRGINIA EROSION AND SEDIMENT CONTROL HANDBOOK AND THE FAIRFAX COUNTY CHECKLIST.
4. A CONSTRUCTION ENTRANCE SHALL BE INSTALLED AND MAINTAINED FOR THE DURATION OF ALL DISTURBING ACTIVITIES AS SHOWN ON THE PLAN PER STD. AND SPEC. NO. 3.02 OF THE VIRGINIA EROSION AND SEDIMENT CONTROL HANDBOOK. NO CONSTRUCTION TRAFFIC SHALL BE PERMITTED TO ENTER THE SITE OTHER THAN THIS ENTRANCE UNTIL PARKING LOT IS PAVED.
5. ALL AREAS DISTURBED BY CONSTRUCTION THAT ARE NOT TO BE CONSTRUCTED UPON SHALL BE PERMANENTLY STABILIZED IMMEDIATELY FOLLOWING FINISH GRADING BY SEEDING AND MULCHING PER STD. AND SPEC. NO. 3.31 OF THE VIRGINIA EROSION AND SEDIMENT CONTROL HANDBOOK.
6. BARE SOIL SURFACES NOT AT FINISH GRADE, WHICH WILL BE EXPOSED MORE THAN 7 DAYS, SHALL BE STABILIZED WITH TEMPORARY SEEDING AND MULCHING PER STD. AND SPEC. NO. 3.32 OF THE VIRGINIA EROSION AND SEDIMENT CONTROL HANDBOOK.

GENERAL LAND CONSERVATION NOTES

1. NO DISTURBED AREA WILL BE DENUDED FOR MORE THAN 7 CALENDAR DAYS UNLESS OTHERWISE AUTHORIZED BY THE DIRECTOR OR HIS AGENT.
2. ALL EROSION AND SILTATION CONTROL MEASURES ARE TO BE PLACED PRIOR TO CLEARING AND GRADING.
3. ALL STORM AND SANITARY LINES NOT IN STREETS ARE TO BE MULCHED AND SEEDED WITHIN 5 DAYS AFTER BACKFILL. NO MORE THAN 500 FEET ARE TO BE OPEN AT ANY ONE TIME.
4. ELECTRIC POWER, TELEPHONE, AND GAS SUPPLY TRENCHES AREA TO BE COMPACTED, SEEDED, AND MULCHED WITHIN 5 DAYS AFTER BACKFILL.
5. DURING CONSTRUCTION, MONITOR NEAREST INLETS TO ENSURE NO CONSTRUCTION SEDIMENT ENTERS THE INLETS. PROVIDE INLET PROTECTION AND MONITOR THE SEDIMENT LEAVING THE SITE.
6. ANY DISTURBED AREA NOT COVERED BY NOTE #1 ABOVE AND NOT PAVED, SODDED OR BUILT UPON BY NOVEMBER 1ST, OR DISTURBED AFTER THAT DATE, IS TO BE MULCHED WITH HAY OR STRAW MULCH AT THE RATE OF TWO TONS PER ACRE AND OVER–SEEDED NO LATER THAN MARCH 15TH.
7. AT THE COMPLETION OF CONSTRUCTION PROJECTS, AND PRIOR TO THE RELEASE OF THE BOND, ALL TEMPORARY SILTATION AND EROSION CONTROLS SHALL BE REMOVED AND DISTURBED AREAS SHALL BE STABILIZED.
8. IF THE MAXIMUM PERIOD FOR DENUDATION IS EXCEEDED AND ANY AREAS REMAIN EXPOSED WITHOUT COVER OR SURFACE, THE CITY MAY (IN THE EVENT THE DEVELOPER DOES NOT) INSTALL SUCH GROUND COVER OR OTHER STABILIZING DEVICES AND/OR MATERIAL TO THE MINIMUM EXTENT NECESSARY TO ACHIEVE EROSION AND SEDIMENT CONTROL EQUAL TO THAT WHICH WOULD HAVE BEEN FURNISHED BY THE PERMANENT COVER SHOWN ON THE APPROVED PLANS. THE COST OF ANY SUCH TEMPORARY MEASURES TAKEN BY THE CITY SHALL BE BORNE BY THE DEVELOPER AND SHALL BE A CHARGE AGAINST THE CONSERVATION DEPOSIT.
9. WHERE CONSISTENT WITH JOB SAFETY REQUIREMENTS, ALL EXCAVATED MATERIAL IS TO BE PLACED ON THE UPHILL SIDE OF TRENCHES. NO MATERIAL IS TO BE PLACED IN STREAMBEDS. NO STOCKPILE IS PERMITTED. WHERE SOIL IS PLACED ON DOWNHILL SIDE OF TRENCHES, IT IS TO BE BACK–SLOPED TO DRAIN TOWARD THE TRENCH. WHEN NECESSARY TO DEWATER THE TRENCHES, THE PUMP DISCHARGE HOSES MUST OUTLET IN A STABILIZED AREA TO AN EXISTING STORM INLET.

MAINTENANCE NOTES

1. MAINTENANCE OF THE TEMPORARY CONSTRUCTION ENTRANCE SHALL BE REQUIRED TO PREVENT MUD DEPOSITS IN THE RIGHT–OF–WAY.
2. INLET PROTECTION SHALL BE INSPECTED AT THE END OF EACH DAY AND AFTER EACH RAINFALL AND REQUIRED REPAIRS MADE IMMEDIATELY.
3. EROSION AND SEDIMENT CONTROL DEVICES SHALL BE MAINTAINED IN PLACE UNTIL GROUND DISTURBING CONSTRUCTION AND PERMANENT STABILIZATION IS COMPLETE AND SHALL BE REMOVED BY PERMISSION OF THE COUNTY INSPECTOR.
4. FILTER STONE SHALL BE REGULARLY CHECKED TO ENSURE THAT FILTRATION PERFORMANCE IS MAINTAINED. STONE CHOKED WITH SEDIMENT SHALL BE REMOVED AND CLEANED OR REPLACED.

SOIL MAP

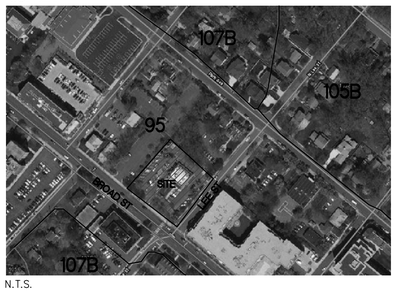

N.T.S.

SOIL INFORMATION

SOIL ID NUMBERS	SOIL SERIES NAME	FOUNDATION SUPPORT	SOIL DRAINAGE	EROSION POTENTIAL	PROBLEM CLASS
95	URBAN LAND	N/A	N/A	N/A	N/A

GENERAL EROSION AND SEDIMENT NOTES

1. UNLESS OTHERWISE INDICATED ALL VEGETATIVE AND STRUCTURAL EROSION AND SEDIMENT CONTROL PRACTICES WILL BE CONSTRUCTED AND MAINTAINED ACCORDING TO MINIMUM STANDARDS AND SPECIFICATIONS OF THE VIRGINIA EROSION AND SEDIMENT CONTROL HANDBOOK AND VIRGINIA REGULATIONS EROSION AND SEDIMENT CONTROL REGULATIONS.
2. THE PLAN APPROVING AUTHORITY MUST BE NOTIFIED ONE WEEK PRIOR TO THE PRE–CONSTRUCTION CONFERENCE, ONE WEEK PRIOR TO COMMENCEMENT OF LAND DISTURBING ACTIVITY, AND ONE WEEK PRIOR TO FINAL INSPECTION.
3. ALL EROSION AND SEDIMENT CONTROL MEASURES ARE TO BE PLACED PRIOR TO OR AS THE FIRST STEP IN CLEARING.
4. A COPY OF THE APPROVED EROSION AND SEDIMENT CONTROL PLAN SHALL BE MAINTAINED ON THE SITE AT ALL TIMES.
5. PRIOR TO COMMENCING LAND DISTURBING ACTIVITIES IN AREAS OTHER THAN INDICATED ON THESE PLANS (INCLUDING, BUT NOT LIMITED TO, OFF–SITE BOTTOM OR WASTE AREAS), THE CONTRACTOR SHALL SUBMIT A SUPPLEMENTARY EROSION CONTROL PLAN TO THE OWNER FOR REVIEW AND APPROVAL BY THE PLAN APPROVING AUTHORITY.
6. THE CONTRACTOR IS RESPONSIBLE FOR INSTALLATION OF ANY ADDITIONAL EROSION CONTROL MEASURES NECESSARY TO PREVENT EROSION AND SEDIMENTATION AS DETERMINED BY THE PLAN APPROVING AUTHORITY.
7. ALL DISTURBED AREAS ARE TO DRAIN TO APPROVED SEDIMENT CONTROL MEASURES AT ALL TIMES DURING LAND DISTURBING ACTIVITIES AND DURING SITE DEVELOPMENT UNTIL FINAL STABILIZATION IS ACHIEVED.
8. DURING DEWATERING OPERATIONS, WATER WILL BE PUMPED INTO ON APPROVED FILTERING DEVICE.
9. THE CONTRACTOR SHALL INSPECT ALL EROSION CONTROL MEASURES PERIODICALLY AND AFTER EACH RUNOFF PRODUCING RAINFALL EVENT. ANY NECESSARY REPAIRS OR CLEANUP TO MAINTAIN THE EFFECTIVENESS OF EROSION CONTROL DEVICES SHALL BE MADE IMMEDIATELY.
10. CONTRACTOR IS TO REMOVE MUD/SWEEP STREET AS NEEDED OR DAILY TO KEEP NORTH LEE STREET FREE OF SEDIMENT.

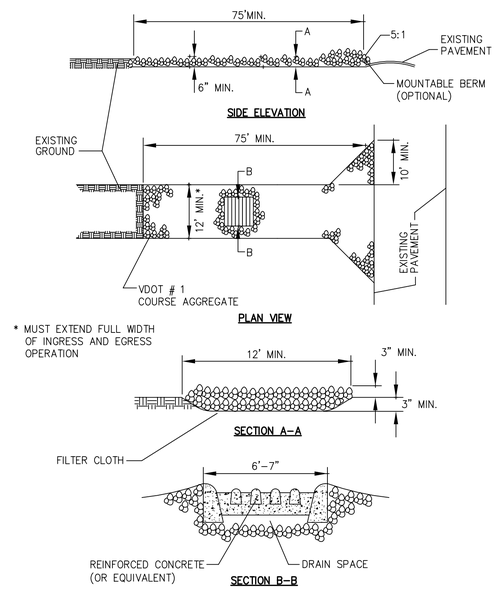

CONSTRUCTION ENTRANCE

NOT TO SCALE

NOTE: CONSTRUCTION ENTRANCE MAY NEED MAINTENANCE OVER TIME BY WAY OF REMOVAL AND REPLACEMENT OF STONE AND/OR REMOVAL OF ACCUMULATED SEDIMENT, BACK FLUSHING ENTRANCE, ETC.

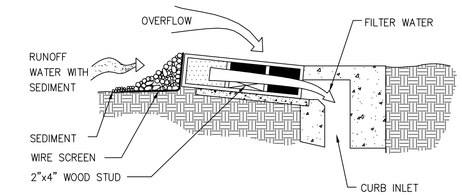

BLOCK AND GRAVEL CURB INLET SEDIMENT FILTER

NOT TO SCALE

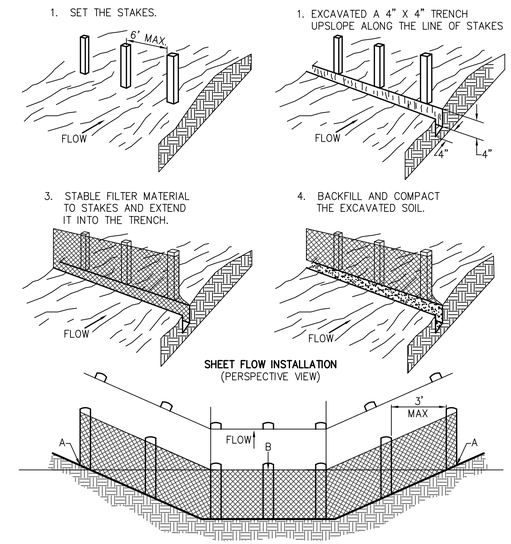

POINTS A SHOULD BE HIGHER THAN POINT B.
DRAINAGEWAY INSTALLATION
(FRONT ELEVATION)

CONSTRUCTION OF SILT FENCE (WITHOUT WIRE SUPPORT)

NOT TO SCALE

1992 3.01

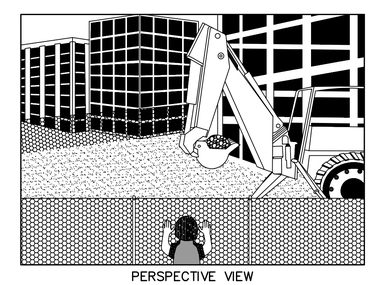

PERSPECTIVE VIEW

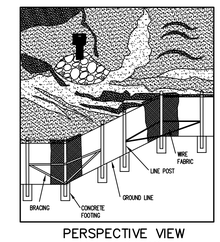

PERSPECTIVE VIEW
METAL FENCE

SAFETY FENCE
(METAL FENCE IS REQUIRED)

SOURCE: ADAPTED FROM CONWED PLASTICS AND VDOT ROAD AND BRIDGE STANDARDS PLATE 3.01–1

NOTE:
CONTRACTOR TO ATTACH A DUST CONTROL BARRIER TO THE SAFETY FENCE TO CONTROL DUST DURING CONSTRUCTION ACTIVITIES.

WALTER L. PHILLIPS INCORPORATED
Engineers • Surveyors • Planners
Landscape Architects • Arborists
207 PARK AVENUE
FALLS CHURCH, VIRGINIA 22046
(703) 532-6163 Fax (703) 533-1301
www.WLPINC.com
ESTABLISHED 1945

DRAWN: BS, AOA
CHECKED: KW
SCALE: NONE
DATE: 8/28/14

COMMONWEALTH OF VIRGINIA
KAREN L. S. WHITE
Lic. No.041850
8/25/14
PROFESSIONAL ENGINEER

REVISION APPROVED BY			
NO.	DESCRIPTION	DATE	REV./ BY	APPROVED

EROSION & SEDIMENT CONTROL NARRITIVIES AND DETAILS

THE KENSINGTON OF FALLS CHURCH

700 WEST BROAD STREET
CITY OF FALLS CHURCH, VIRGINIA

SHEET: C-0603

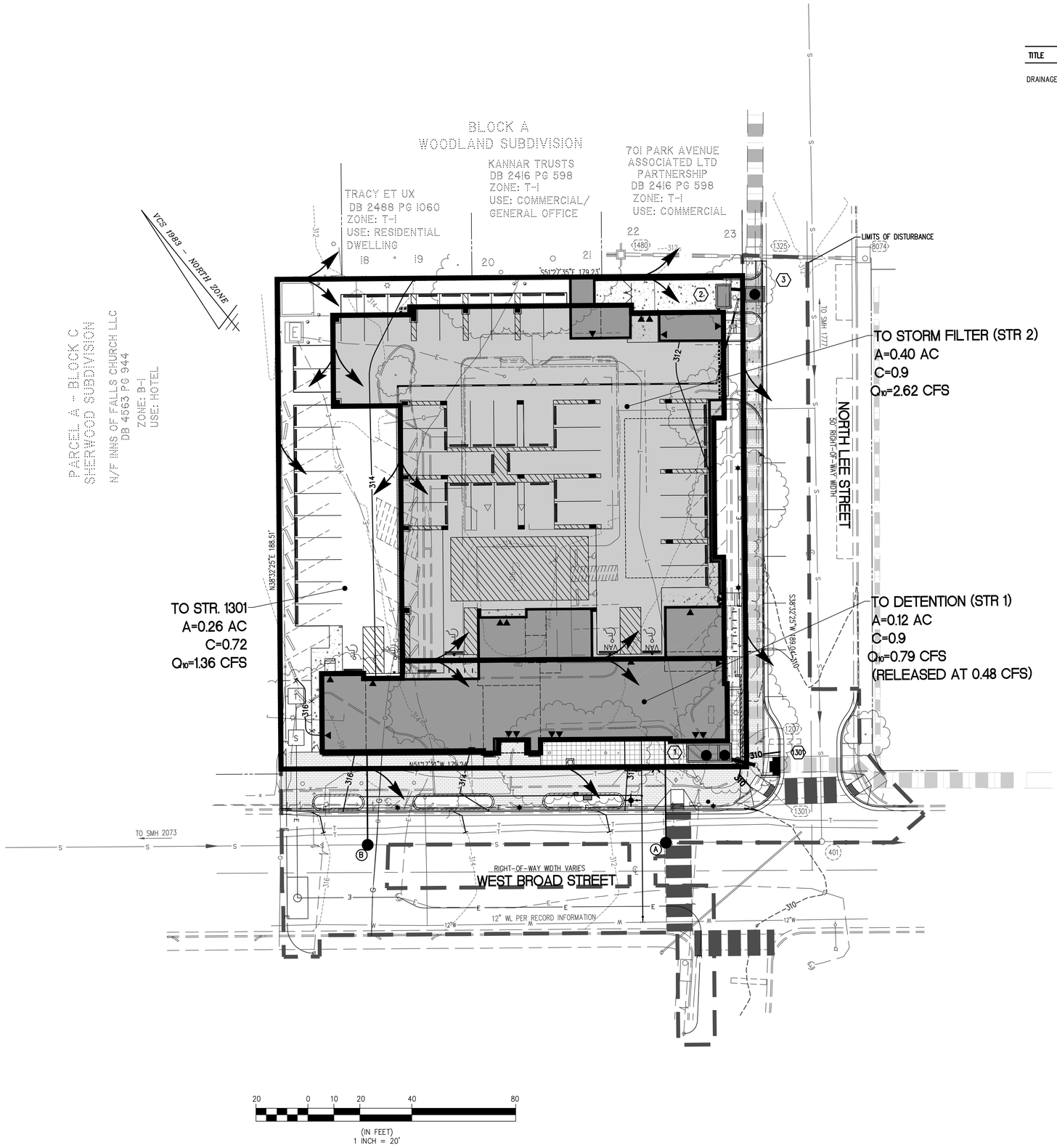

LEGEND

TITLE	SYMBOL
DRAINAGE DIVIDES	

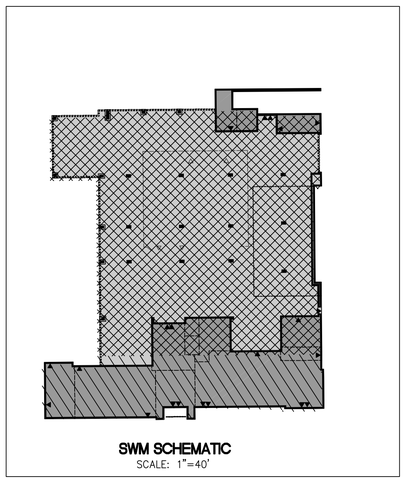

AREA TO DETENTION (0.12 AC)

AREA TO STORM FILTER (0.40 AC)

WALTER L. PHILLIPS INCORPORATED
ESTABLISHED 1945
Engineers • Surveyors • Planners
Landscape Architects • Arborists
207 PARK AVENUE
FALLS CHURCH, VIRGINIA 22046
(703) 532-6163 Fax (703) 533-1301
www.WLPINC.com

DRAWN: BE/KJW
CHECKED: VMF
SCALE: 1"=20'
DATE: 6/26/14

COMMONWEALTH OF VIRGINIA
KAREN L. S. WHITE
Lic. No.041850
8/25/14
PROFESSIONAL ENGINEER

REVISION APPROVED BY

NO.	DESCRIPTION	DATE	REV. BY	APPROVED	DATE

DRAINAGE DIVIDES

THE KENSINGTON OF FALLS CHURCH

700 WEST BROAD STREET
CITY OF FALLS CHURCH, VIRGINIA

File No. CC-6 Tax Map No. Job No. 13-014 Cadd Dwg. File: Q:\sdskproj\13014\dwg\Engineering\Site Plan\13014C-0701.dwg

SHEET: C-0701

STORMWATER MANAGEMENT COMPUTATIONS

FROM THE STORMWATER MANAGEMENT COMPUTATIONS ON THIS SHEET THE PRE-DEVELOPMENT PEAK RUNOFF RELEASE RATES FROM THE SITE ARE 3.36 CFS AND 4.48 CFS FOR THE 2 AND 10 YEAR STORMS RESPECTIVELY. DUE TO THE PROPOSED IMPROVEMENTS, THE SITE C FACTOR WILL INCREASE FROM 0.79 TO 0.84. THE POST DEVELOPMENT RELEASE RATE WILL INCREASE FROM 3.36 CFS FOR THE 2 YEAR STORM AND 4.48 CFS FOR THE 10 YEAR STORM TO 3.57 CFS AND 4.76 CFS FOR 2 YEAR AND 10 YEAR STORMS RESPECTIVELY BEFORE DETENTION. THE APPLICANT PROPOSES TO REDUCE THE PEAK RATES OF RUNOFF FOR THE 2 AND 10-YEAR STORMS TO LESS THAN PRE-DEVELOPMENT LEVELS. THIS WILL BE ACHIEVED BY PROVIDING STORMWATER DETENTION IN AN UNDERGROUND DETENTION FACILITY TO BE LOCATED ON SITE UNDER THE PLAZA AREA.

I. SITE PRE-DEVELOPMENT

SITE AREA = 33,835 SF OR 0.78 AC

A. CONTRIBUTING AREAS:

0.14 AC @ 0.30 GREEN AREA
0.64 AC @ 0.90 ROOFS, DRIVEWAYS, SIDEWALKS, ETC.
0.78 AC

B. WEIGHTED "C" FACTOR:

$$\frac{(0.14)(0.30) + (0.64)(0.90)}{0.78} = 0.79$$

C. TIME OF CONCENTRATION:

5 MINUTES

D. RUNOFF:

Q2 = (0.79)(5.45)(0.78) = 3.36 CFS
Q10 = (0.79)(7.27)(0.78) = 4.48 CFS

II. SITE POST-DEVELOPMENT

A. CONTRIBUTING AREAS:

0.08 AC. @ 0.30 GREEN AREA
0.70 AC. @ 0.90 ROOFS, DRIVEWAYS, SIDEWALKS, ETC.
0.78 AC.

B. WEIGHTED "C" FACTOR:

$$\frac{(0.08)(0.30)+(0.70)(0.90)}{0.78} = 0.84$$

C. TIME OF CONCENTRATION:

5 MINUTES

D. RUNOFF:

Q2 = (0.84)(5.45)(0.78) = 3.57 CFS
Q10 = (0.84)(7.27)(0.78) = 4.76 CFS

III. UNDETAINED SITE POST-DEVELOPMENT

A. CONTRIBUTING AREAS:

0.08 AC. @ 0.30 GREEN AREA
0.58 AC. @ 0.90 ROOFS, DRIVEWAYS, SIDEWALKS, ETC.
0.66 AC.

B. WEIGHTED "C" FACTOR:

$$\frac{(0.08)(0.30)+(0.58)(0.90)}{0.66} = 0.83$$

C. TIME OF CONCENTRATION:

5 MINUTES

D. RUNOFF:

Q2 = (0.83)(5.45)(0.66) = 2.99 CFS

Q10 = (0.83)(7.27)(0.66) = 3.98 CFS

IV. STORM RUNOFF SUMMARY

A. MAXIMUM PEAK RELEASE RATE FROM DETENTION:

(0.12 AC OF ROOF AREA TO DETENTION SYSTEM)

Q2 = 3.36 SITE – 2.99 UNDETAINED = 0.37 CFS

Q10 = 4.48 SITE – 3.98 UNDETAINED = 0.50 CFS

V. ACTUAL POST-DEVELOPMENT RUNOFF

A. DETENTION SYSTEM RELEASE RATES:

Q2 = 0.33 CFS **

Q10 = 0.48 CFS **

** SEE ROUTING COMPUTATIONS SHEET C-0703

B. TOTAL SITE RUNOFF:

Q(RUNOFF) = Q(DETAINED) + Q(UNDETAINED)

Q2 = 0.33 DETAINED + 2.99 UNDETAINED = 3.32 CFS

Q10 = 0.48 DETAINED + 3.98 UNDETAINED = 4.46 CFS

C. COMPARE TO MAXIMUM PEAK SITE RUNOFF:

[Q2(RUNOFF) = 3.32 CFS] < [Q2(MAX) = 3.36]

[Q10(RUNOFF) = 4.46 CFS] < [Q10(MAX) = 4.48]

ONSITE BMP COMPUTATIONS

THE PROPOSED CONSTRUCTION IS CONSIDERED REDEVELOPMENT DUE TO THE FACT THAT THERE IS LESS THAN 20% INCREASE IN IMPERVIOUS AREA. THE PHOSPHORUS REMOVAL REQUIREMENT FOR THIS REDEVELOPMENT IS 20.0%. THE PHOSPHORUS REMOVAL REQUIREMENT IS PROPOSED TO BE MET THROUGH THE USE OF A STORMFILTER OR EQUIVALENT WHICH HAS A PHOSPHORUS REMOVAL EFFICIENCY OF 50%. THE TOTAL PHOSPHORUS REMOVAL PROVIDED FROM THE MEASURE IS 28.6%. THE BMP FACILITY WILL BE PRIVATELY OWNED AND MAINTAINED. SEE SHEET C-0704 FOR DETAILS. SEE SHEET C-0701 FOR PROPOSED DRAINAGE DIVIDES.

BMP COMPUTATIONS – CHESAPEAKE BAY METHOD

PHOSPHORUS REMOVAL CALCULATIONS

L = {P * Pj * [0.05 + 0.009(I)] * C * A * 2.72} / 12

WHERE:
L = PHOSPHORUS LOADING (lbs/yr)
P = AVERAGE RAINFALL DEPTH (INCHES) = 40 IN/YR FOR NORTHERN VIRGINIA
Pj = UNITLESS CORRECTION FACTOR FOR STORMS THAT PRODUCE NO RUNOFF
Pj = 0.9
I = PERCENT OF SITE IMPERVIOUSNESS IN WHOLE NUMBERS
C = FLOW-WEIGHTED MEAN POLLUTANT CONCENTRATION (mg/L)
C = 0.26 mg/L WHEN I<20%
C = 1.08 mg/L WHEN I>20%
A = AREA OF DEVELOPMENT SITE (ACRES)

1. SITE NAME:

THE KENSINGTON – REDEVELOPMENT

2. EXISTING SITE IMPERVIOUSNESS

#	SUBAREA DESIGNATION AND DESCRIPTION	
A.	PAVEMENT, SIDEWALKS AND STRUCTURES	0.64 AC.
B.	LANDSCAPED AREA	0.14 AC
	TOTAL AREA (E) =	0.78 ACRES
	SITE IMPERVIOUSNESS (A/E) * 100 =	(0.64/0.78)x100 = 80.0%

3. PROPOSED SITE IMPERVIOUSNESS

#	SUBAREA DESIGNATION AND DESCRIPTION	
A.	PAVEMENT, SIDEWALKS AND STRUCTURES	0.70 AC
B.	LANDSCAPED AREAS	0.08 AC
	TOTAL AREA (E) =	0.78 ACRES
	SITE IMPERVIOUSNESS (A/E) x 100 =	(0.70/0.78)x100 = 90.0% IMPERVIOUS

4. SITE CONDITIONS

(A) NAME OF WATERSHED:	CAMERON RUN
(B) WATERSHED IMPERVIOUSNESS AS A PERCENTAGE	50%
(C) DETERMINE WHETHER PROPOSAL IS CONSIDERED NEW DEVELOPMENT OR REDEVELOPMENT:	REDEVELOPMENT

5. PHOSPHORUS LOADINGS

(A) EXISTING PHOSPHORUS LOADING:

L = {P * Pj * [0.05 + 0.009(I)] * C * A * 2.72} / 12
L(pre) = {40 * 0.9 * [0.05 + 0.009(Isite-pre 80.0)] * (C) 1.08 * (A) 0.78 * 2.72} / 12
L(pre) = 5.29 Lbs/Year

(B) PROPOSED PHOSPHORUS LOADING:

L(post) = {40 * 0.9 * [0.05 + 0.009(Isite-post 90.0)] * (C) 1.08 * (A) 0.78 * 2.72}/ 12
L(post) = 5.91 Lbs/Year

6. PHOSPHORUS REMOVAL REQUIRED

(A) PHOSPHORUS REMOVAL REQUIRED: 20%*
*** 20% PHOSPHORUS REMOVAL REQUIRED BY VOLUNTARY PROFFERED CONDITION #7**

REMOVAL REQUIRED = Lpost 5.91 – 0.8(Lpre 5.29) = 1.68 Lbs/Year

(B) BMP REMOVAL REQUIRED:

PERCENT OF PHOSPHORUS REQUIRED TO BE REMOVED

$$\frac{1.68 * 100}{5.91} = \boxed{28.4\%}$$

7. PHOSPHORUS REMOVAL PROVIDED

(A) BMP FACILITY	REMOVAL EFF.	IMP. SITE (ONSITE)	COVERAGE (OFFSITE)	Lpost (lbs/yr)	LOAD REMOVED (lbs/yr)
STORMFILTER	0.50 x	[0.40/0.70 +	0.00]	x 5.91	= 1.69
				TOTAL	= 1.69
				1.69 * 100/5.91 =	28.6%

(B) **7(A) 28.6% > 6(B) 28.4% , THE PHOSPHORUS REMOVAL PROVIDED IS SATISFIED.**

OUTFALL NARRATIVE

THE EXISTING SITE OUTFALLS TO A STORM SEWER SYSTEM AT THE CORNER OF N. LEE ST. AND W. BROAD STREET.

THIS SITE CURRENTLY HAS A 10 YEAR RUNOFF OF 4.48 CFS OF WHICH THE MAJORITY IS COLLECTED BY AN EXISTING ONSITE STORM INLET WHICH IS THEN DISCHARGED INTO STRUCTURE 1301 IN NORTH LEE STREET. THE REMAINDER OF THE SITE'S RUNOFF IS COLLECTED ON NORTH LEE STREET AND INTO INLET 1301. FROM THIS POINT, THE EXISTING PUBLIC SYSTEM RUNS ALONG THE NORTH SIDE OF BROAD STREET AND OUTFALLS INTO THE EXISTING OPEN CHANNEL THAT LEADS TO TRIPPS RUN.

THE REDEVELOPMENT OF THIS SITE WILL RESULT IN AN INCREASE OF IMPERVIOUS AREA RAISING THE "C" FACTOR FROM 0.79 TO 0.84. WITH THE USE OF AN ONSITE DETENTION SYSTEM, THE PROPOSED 10 YEAR SITE RUNOFF WILL BE REDUCED TO 4.42 CFS, WHICH IS LESS THAN THE EXISTING RUNOFF. THE PROPOSED DRAINAGE PATTERN WILL BE SIMILAR TO EXISTING WITH THE ENTIRE SITE STILL DRAINING TO STRUCTRE 1301 AFTER IT IS TREATED WITH BMP OR DETAINED IN THE VAULT.

THE STORM SEWER COMPUTATIONS ON THIS SHEET SHOW THAT THE PROPOSED PIPES FROM THE DETENTION STRUCTURE AND BMP STRUCTURE WILL ADEQUATELY CONVEY THE ONSITE RUNOFF FOR THE 10 YEAR STORM. DUE TO THE RESULTS OF THIS ANALYSIS AND THE FACT THAT THE PROJECT WILL RESULT IN THE REDUCTION OF THE EXISTING RUNOFF RATE, IT IS THE OPINION OF THE SUBMITTING ENGINEER THAT THIS OUTFALL IS ADEQUATE.

WALTER L. PHILLIPS INCORPORATED
ESTABLISHED 1945
Engineers • Surveyors • Planners
Landscape Architects • Arborists
207 PARK AVENUE
FALLS CHURCH, VIRGINIA 22046
(703) 532-6163 Fax (703) 533-1301
www.WLPINC.com

DRAWN: BY: KNA
CHECKED: KNW
SCALE: NONE
DATE: 8/26/14

COMMONWEALTH OF VIRGINIA
KAREN L. S. WHITE
Lic. No.041850
8/25/14
PROFESSIONAL ENGINEER

REVISION APPROVED BY

NO.	DESCRIPTION	DATE	REV. BY	APPROVED	DATE

STORMWATER MANAGEMENT AND BMP CALCULATIONS

THE KENSINGTON OF FALLS CHURCH

700 WEST BROAD STREET
CITY OF FALLS CHURCH, VIRGINIA

Hydrograph Report

1

Hydraflow Hydrographs by Intelisolve v9.22 — Monday, Aug 25, 2014

Hyd. No. 5

Detention Vault

Hydrograph type	= Reservoir	Peak discharge	= 0.334 cfs
Storm frequency	= 2 yrs	Time to peak	= 720 min
Time interval	= 2 min	Hyd. volume	= 1,211 cuft
Inflow hyd. No.	= 1 - To Detention	Max. Elevation	= 309.60 ft
Reservoir name	= Vault 1	Max. Storage	= 167 cuft

Storage Indication method used.

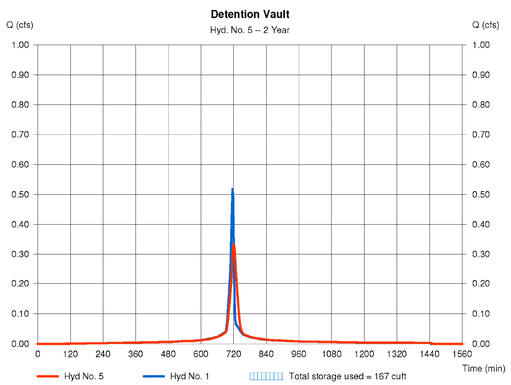

Hydrograph Report

2

Hydraflow Hydrographs by Intelisolve v9.22 — Monday, Aug 25, 2014

Hyd. No. 5

Detention Vault

Hydrograph type	= Reservoir	Peak discharge	= 0.479 cfs
Storm frequency	= 10 yrs	Time to peak	= 722 min
Time interval	= 2 min	Hyd. volume	= 2,026 cuft
Inflow hyd. No.	= 1 - To Detention	Max. Elevation	= 311.80 ft
Reservoir name	= Vault 1	Max. Storage	= 328 cuft

Storage Indication method used.

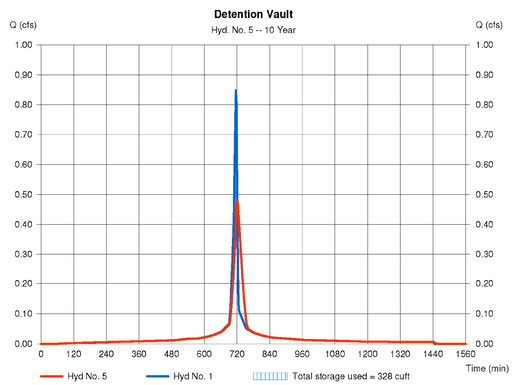

Hydrograph Report

3

Hydraflow Hydrographs by Intelisolve v9.22 — Monday, Aug 25, 2014

Hyd. No. 5

Detention Vault

Hydrograph type	= Reservoir	Peak discharge	= 1.449 cfs
Storm frequency	= 100 yrs	Time to peak	= 718 min
Time interval	= 2 min	Hyd. volume	= 2,883 cuft
Inflow hyd. No.	= 1 - To Detention	Max. Elevation	= 312.56 ft
Reservoir name	= Vault 1	Max. Storage	= 371 cuft

Storage Indication method used.

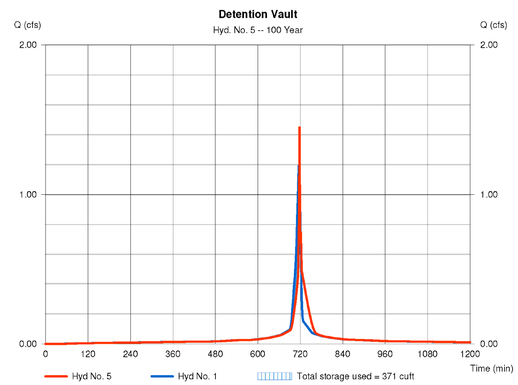

Pond Report

Hydraflow Hydrographs by Intelisolve v9.22 — Monday, Aug 25, 2014

Pond No. 1 - Vault 1

Pond Data

Contours - User-defined contour areas. Conic method used for volume calculation. Begining Elevation = 307.30 ft

Stage / Storage Table

Stage (ft)	Elevation (ft)	Contour area (sqft)	Incr. Storage (cuft)	Total storage (cuft)
0.00	307.30	74	0	0
1.00	308.30	74	74	74
2.00	309.30	74	74	148
3.00	310.30	74	74	222
4.00	311.30	74	74	296
4.90	312.30	74	67	363
5.70	313.00	74	59	422

Culvert / Orifice Structures

	[A]	[B]	[C]	[PrfRsr]
Rise (in)	= 15.00	3.00	Inactive	0.00
Span (in)	= 15.00	3.00	3.00	0.00
No. Barrels	= 1	1	1	0
Invert El. (ft)	= 307.30	307.30	309.80	0.00
Length (ft)	= 12.00	0.67	0.67	0.00
Slope (%)	= 2.00	0.00	0.00	n/a
N-Value	= .013	.013	.013	n/a
Orifice Coeff.	= 0.60	0.60	0.60	0.60
Multi-Stage	= n/a	Yes	Yes	No

Weir Structures

	[A]	[B]	[C]	[D]
Crest Len (ft)	= 8.00	Inactive	0.00	0.00
Crest El. (ft)	= 312.20	311.55	0.00	0.00
Weir Coeff.	= 3.33	3.33	3.33	3.33
Weir Type	= Riser	Rect	---	---
Multi-Stage	= Yes	No	No	No

Exfil.(in/hr) = 0.000 (by Contour)
TW Elev. (ft) = 0.00

Note: Culvert/Orifice outflows are analyzed under inlet (ic) and outlet (oc) control. Weir risers checked for orifice conditions (ic) and submergence (s).

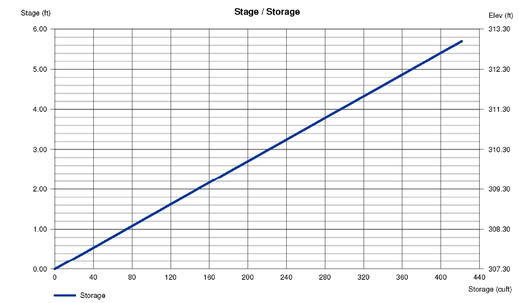

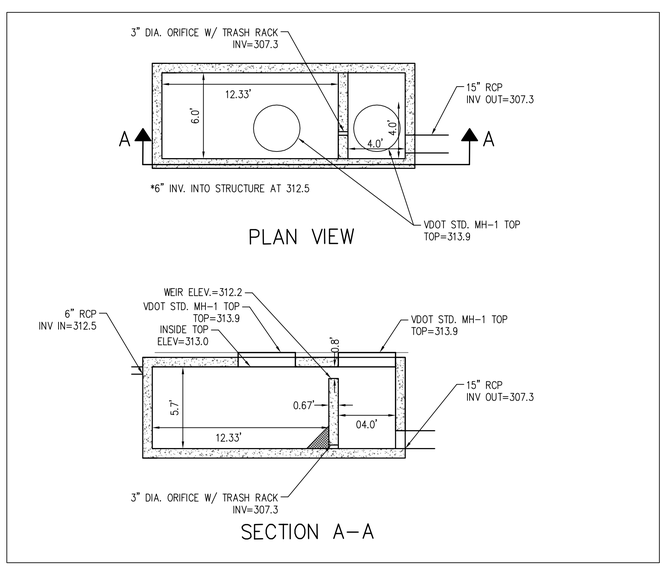

DETENTION FACILITY DETAIL (STRUCTURE 1)

(PRIVATELY OWNED AND MAINTAINED)
SCALE: 1"=5'

NOTE: THIS DETAIL IS FOR DIMENSIONAL PURPOSES ONLY. CONTROL STRUCTURE TO BE DESIGNED BY OTHERS. SHOP DRAWINGS TO BE PROVIDED BY CONTRACTOR PRIOR TO INSTALLATION.

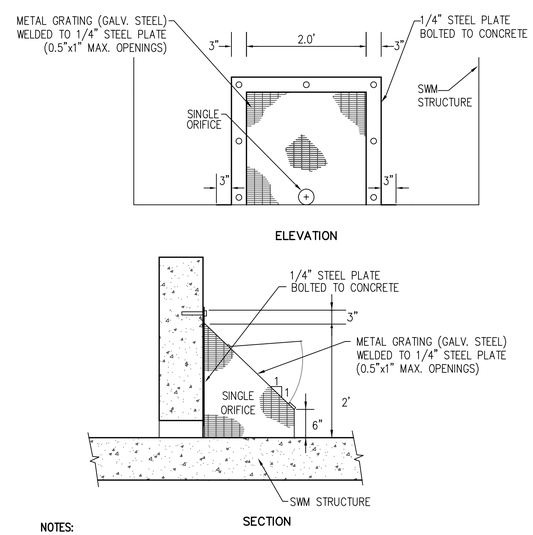

NOTES:

1. THIS DETAIL (METAL GRATING AND STEEL PLATE) MAY BE APPLIED DIRECTLY AGAINST CONCRETE.
2. A 1.5'x2' HINGED GATE WITH LOCKING MECHANISM SHALL BE INSTALLED ON THE FRONT FACE OF THE CAGE.

SWM TRASH RACK DETAIL

NOT TO SCALE

DETENTION SUMMARY

AS SHOWN ON THE HYDROGRAPH REPORTS ON THIS SHEET, THE DETENTION SYSTEM HAS A STORAGE VOLUME OF 363 CUBIC FEET AT THE WEIR WALL AND THE MAXIMUM RELEASE RATES FROM THE DETENTION SYSTEM ARE AS FOLLOWS:

Q2 = 0.334 CFS
Q10 = 0.479 CFS

WALTER L. PHILLIPS INCORPORATED
ESTABLISHED 1945
Engineers • Surveyors • Planners
Landscape Architects • Arborists
207 PARK AVENUE
FALLS CHURCH, VIRGINIA 22046
(703) 532-6163 Fax (703) 533-1301
www.WLPINC.com

DRAWN: BY: KNC
CHECKED: VAK
DATE: 8/25/14
SCALE: NONE

COMMONWEALTH OF VIRGINIA — KAREN L. S. WHITE — Lic. No.041850 — 8/25/14 — PROFESSIONAL ENGINEER

REVISION APPROVED BY					
NO.	DESCRIPTION	DATE	REV. BY	APPROVED	DATE

STORMWATER MANAGEMENT DETAILS

THE KENSINGTON OF FALLS CHURCH

700 WEST BROAD STREET
CITY OF FALLS CHURCH, VIRGINIA

CONTECH ENGINEERED SOLUTIONS

The Stormwater Management StormFilter® **Sizing Summary**

The Kensington
Falls Church, VA
Stormwater Treatment System - Design Summary — **July 9th, 2014**

Information provided:

Structure ID	Area (ac)	% Impervious	C	Water Quality Flow (cfs)	10 Year Peak Flow (cfs)
SF	0.40	100	0.90	0.126	2.61

- Presiding agency = VDEQ

Design Criteria:
- Design storm = Modified Rational method
- Rainfall intensity = 0.35in/hr (currently accepted by the VDEQ)
- Media = Zeolite/Perlite/GAC
- Head Requirement (Operating Head-Outlet Elevation) = 33" for 27" Cartridges, 24" for 18" Cartridges, 18" for 18" Low-Drop Cartridges
- Cartridge Operating Flow @ 2 gpm/sf = 22.5 gpm (27"), 15 gpm (18"), 10 gpm (18" Low-Drop)

Size estimates:

The Stormwater Management StormFilter® is a passive, siphon-actuated, flow-through stormwater filtration system consisting of a structure that houses rechargeable, media-filled filter cartridges. The StormFilter works by passing stormwater through the media-filled cartridges, which trap particulates and adsorb pollutants such as dissolved metals, nutrients, and hydrocarbons. The StormFilter system is VDCR verified and as a result has received approval for 80% TSS and 50% TP removal (65% TP Removal in some locations).

The StormFilter is a flow-based system utilizing cartridges flowing at 2 gpm/ft^2 of filter media. The system is sized by calculating the peak water quality flow rate associated with the design storm. The water quality flow rate was calculated using the Modified Rational Method assuming a rainfall intensity of 0.35 inches per hour.

Given the information above the treatment flow rate was determined to be:

SF

$$Q_{treat} = CiA = 0.90 \times 0.35 \, {}^{in}/_{hr} \times 0.40 acres = 0.126 cfs$$

$$N_{cartridges} = \frac{Q_{treat} \times 449 \, {}^{gpm}/_{cfs}}{SA_{cartridge} \times Q_{specific(cart)}} = \frac{0.126 cfs \times 449 \, {}^{gpm}/_{cfs}}{7.50 \, ft^2 \times 2 \, {}^{gpm}/_{ft^2}} = 3.77$$ → **use (4) 18" cartridges**

Structure ID	# of 18" Cartridges Required	Recommended StormFilter Configuration
SF1	4	4.5'x8' Linear Grate Vault

The 18" tall cartridge contains 7.50 square feet of media and a radial media depth of seven inches. The estimated cost of this system, complete and delivered to the job site, is available upon request. The contractor is responsible for setting the StormFilter vault and all external piping.

Maintenance:

The StormFilter requires regular maintenance to operate effectively. Contech recommends annual inspections, with full maintenance typically required every 24-36 months. Disposal of material should be handled in accordance with local regulations. Please contact Contech's Maintenance Department for all questions regarding maintenance at 866-740-3318 or visit our website at www.ContechES.com.

605 Global Way, Suite 113, Linthicum, MD 21090
Toll-free: 866.740.3318 Fax: 866.376.8511
Provided By CONTECH on: 7/9/2014

NOTE:
BMP MAINTENANCE AGREEMENT REQUIRED TO BE RECORDED IN ARLINGTON COUNTY PRIOR TO SITE PLAN APPROVAL

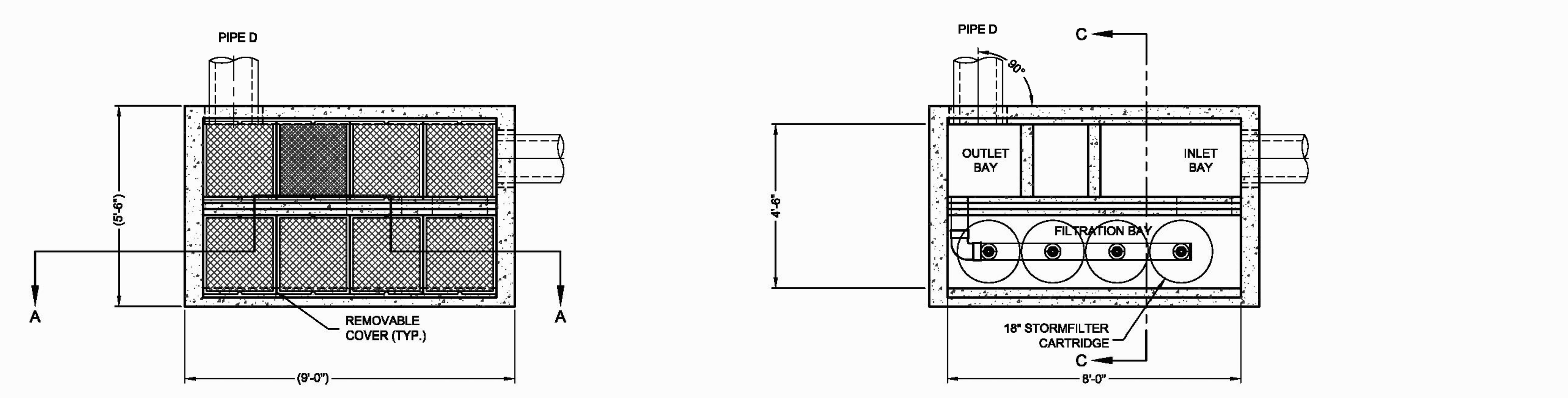

PLAN VIEW

SECTION B-B
FLOWKIT 60R

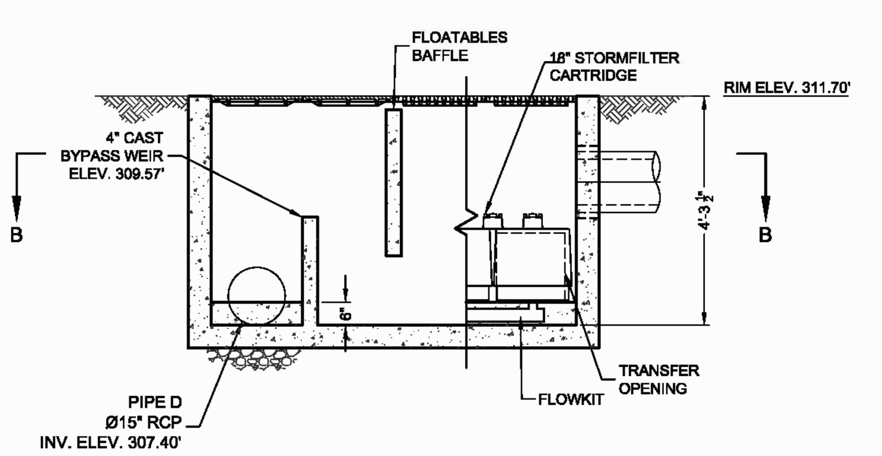

SECTION A-A

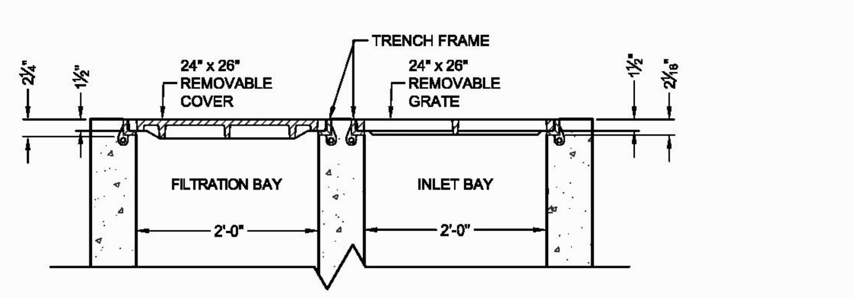

SECTION C-C

MATERIALS LIST - PROVIDED BY CONTECH

COUNT	DESCRIPTION	INSTALLED BY
4	18" CARTRIDGE, 15 GPM (BLK)	CONTECH
1	FLOW KIT	CONTECH
1	TRANSFER HOLE COVER	CONTECH
32 LF	48" x 2-1/2" TRENCH FRAME	CONTECH
8	24" x 27" REMOVABLE COVER	CONTRACTOR

SITE DESIGN DATA

WATER QUALITY FLOW RATE	0.13 CFS
PEAK FLOW RATE	2.61 CFS
RETURN PERIOD OF PEAK FLOW	10 YRS
FILTER MEDIA TYPE	ZPG

PERFORMANCE SPECIFICATION
FILTER CARTRIDGES SHALL BE MEDIA-FILLED, PASSIVE, SIPHON ACTUATED, RADIAL FLOW, AND SELF CLEANING. **RADIAL MEDIA DEPTH SHALL BE 7-INCHES.** FILTER MEDIA CONTACT TIME SHALL BE AT LEAST **37 SECONDS.**
SPECIFIC FLOW RATE SHALL BE **2 GPM/SF (MAXIMUM).** SPECIFIC FLOW RATE IS THE MEASURE OF THE FLOW (GPM) DIVIDED BY THE MEDIA SURFACE CONTACT AREA (SF). MEDIA VOLUMETRIC FLOW RATE SHALL BE **6 GPM/CF OF MEDIA (MAXIMUM).**

GENERAL NOTES
1. CONTECH TO PROVIDE ALL MATERIALS UNLESS NOTED OTHERWISE.
2. DIMENSIONS MARKED WITH ( ) ARE REFERENCE DIMENSIONS. ACTUAL DIMENSIONS MAY VARY.
3. FOR FABRICATION DRAWINGS WITH DETAILED STRUCTURE DIMENSIONS AND WEIGHTS, PLEASE CONTACT YOUR CONTECH ENGINEERED SOLUTIONS LLC REPRESENTATIVE. www.ContechES.com
4. STORMFILTER WATER QUALITY STRUCTURE SHALL BE IN ACCORDANCE WITH ALL DESIGN DATA AND INFORMATION CONTAINED IN THIS DRAWING. CONTRACTOR TO CONFIRM THAT STRUCTURE MEETS THE REQUIREMENTS OF THE PROJECT.
5. STRUCTURE SHALL MEET AASHTO HS20 LOAD RATING, ASSUMING EARTH COVER OF 0' - 5' AND GROUNDWATER ELEVATION AT, OR BELOW, THE OUTLET PIPE INVERT ELEVATION. ENGINEER OF RECORD TO CONFIRM ACTUAL GROUNDWATER ELEVATION. CASTINGS SHALL MEET AASHTO M306 AND BE CAST WITH THE CONTECH LOGO.
6. GRATE INLETS/COVERS SHALL BE EAST JORDAN IRON WORKS #00695840 / #00695820 / #47513031 OR APPROVED EQUALS.
7. TRENCH FRAMES SHALL BE EAST JORDAN IRON WORKS #00695030 / #47300310 OR APPROVED EQUALS.
8. HEAVIEST GRATE/COVER PICK WEIGHT IS 200 LBS.

INSTALLATION NOTES
A. ANY SUB-BASE, BACKFILL DEPTH, AND/OR ANTI-FLOTATION PROVISIONS ARE SITE-SPECIFIC DESIGN CONSIDERATIONS AND SHALL BE SPECIFIED BY ENGINEER OF RECORD.
B. CONTRACTOR TO PROVIDE EQUIPMENT WITH SUFFICIENT LIFTING AND REACH CAPACITY TO LIFT AND SET THE STORMFILTER STRUCTURE (LIFTING CLUTCHES PROVIDED).
C. CONTRACTOR TO INSTALL JOINT SEALANT BETWEEN ALL STRUCTURE SECTIONS AND ASSEMBLE STRUCTURE.
D. CONTRACTOR TO PROVIDE, INSTALL, AND GROUT PIPES. MATCH OUTLET PIPE INVERT WITH OUTLET BAY FLOOR. RUNOFF.
E. CONTRACTOR TO REMOVE TRANSFER HOLE COVERS PRIOR TO PLACING THE SYSTEM ONLINE.

STRUCTURE WEIGHT
APPROXIMATE HEAVIEST PICK = 20500 LBS.

CONTECH **PROPOSAL** DRAWING

4.5' x 8' LINEAR GRATE STORMFILTER - 505522-010
THE KENSINGTON - 700 WEST BROAD ST
FALLS CHURCH, VA
SITE DESIGNATION: BMP

CONTECH ENGINEERED SOLUTIONS LLC www.ContechES.com

DATE: 7/10/2014			
DESIGNED: AML	DRAWN: AML	CHECKED:	APPROVED:
PROJECT NUMBER: 505522			
SHEET: 1 OF #			

MARK	DATE	REVISION DESCRIPTION	BY

Sediment removal and cartridge replacement on an as needed basis is recommended unless site conditions warrant.

Once an understanding of site characteristics has been established, maintenance may not be needed for one to three years, but inspection is warranted and recommended annually.

Inspection Procedures

The primary goal of an inspection is to assess the condition of the cartridges relative to the level of visual sediment loading as it relates to decreased treatment capacity. It may be desirable to conduct this inspection during a storm to observe the relative flow through the filter cartridges. If the submerged cartridges are severely plugged, then typically large amounts of sediments will be present and very little flow will be discharged from the drainage pipes. If this is the case, then maintenance is warranted and the cartridges need to be replaced.

Warning: In the case of a spill, the worker should abort inspection activities until the proper guidance is obtained. Notify the local hazard control agency and CONTECH Stormwater Solutions immediately.

To conduct an inspection:

Important: Inspection should be performed by a person who is familiar with the operation and configuration of the StormFilter treatment unit.

1. If applicable, set up safety equipment to protect and notify surrounding vehicle and pedestrian traffic.
2. Visually inspect the external condition of the unit and take notes concerning defects/problems.

3. Open the access portals to the vault and allow the system vent.
4. Without entering the vault, visually inspect the inside of the unit, and note accumulations of liquids and solids.
5. Be sure to record the level of sediment build-up on the floor of the vault, in the forebay, and on top of the cartridges. If flow is occurring, note the flow of water per drainage pipe. Record all observations. Digital pictures are valuable for historical documentation.
6. Close and fasten the access portals.
7. Remove safety equipment.
8. If appropriate, make notes about the local drainage area relative to ongoing construction, erosion problems, or high loading of other materials to the system.
9. Discuss conditions that suggest maintenance and make decision as to weather or not maintenance is needed.

Maintenance Decision Tree

The need for maintenance is typically based on results of the inspection. The following Maintenance Decision Tree should be used as a general guide. (Other factors, such as Regulatory Requirements, may need to be considered)

1. Sediment loading on the vault floor.
   a. If > 4" of accumulated sediment, maintenance is required.
2. Sediment loading on top of the cartridge.
   a. If > 1/4" of accumulation, maintenance is required.
3. Submerged cartridges.
   a. If > 4" of static water in the cartridge bay for more that 24 hours after end of rain event, maintenance is required.
4. Plugged media.
   a. If pore space between media granules is absent, maintenance is required.
5. Bypass condition.
   a. If inspection is conducted during an average rain fall event and StormFilter remains in bypass condition (water over the internal outlet baffle wall or submerged cartridges), maintenance is required.
6. Hazardous material release.
   a. If hazardous material release (automotive fluids or other) is reported, maintenance is required.
7. Pronounced scum line.
   a. If pronounced scum line (say ≥ 1/4" thick) is present above top cap, maintenance is required.
8. Calendar Lifecycle.
   a. If system has not been maintained for 3 years maintenance is required.

Assumptions
- No rainfall for 24 hours or more
- No upstream detention (at least not draining into StormFilter)
- Structure is online
- Outlet pipe is clear of obstruction
- Construction bypass is plugged

Maintenance

Depending on the configuration of the particular system, maintenance personnel will be required to enter the vault to perform the maintenance.

Important: If vault entry is required, OSHA rules for confined space entry must be followed.

Filter cartridge replacement should occur during dry weather. It may be necessary to plug the filter inlet pipe if base flows is occurring.

Replacement cartridges can be delivered to the site or customers facility. Information concerning how to obtain the replacement cartridges is available from CONTECH Stormwater Solutions.

Warning: In the case of a spill, the maintenance personnel should abort maintenance activities until the proper guidance is obtained. Notify the local hazard control agency and CONTECH Stormwater Solutions immediately.

To conduct cartridge replacement and sediment removal maintenance:

1. If applicable, set up safety equipment to protect maintenance personnel and pedestrians from site hazards.
2. Visually inspect the external condition of the unit and take notes concerning defects/problems.
3. Open the doors (access portals) to the vault and allow the system to vent.
4. Without entering the vault, give the inside of the unit, including components, a general condition inspection.
5. Make notes about the external and internal condition of the vault. Give particular attention to recording the level of sediment build-up on the floor of the vault, in the forebay, and on top of the internal components.
6. Using appropriate equipment offload the replacement cartridges (up to 150 lbs. each) and set aside.
7. Remove used cartridges from the vault using one of the following methods:

Method 1:

A. This activity will require that maintenance personnel enter the vault to remove the cartridges from the under drain manifold and place them under the vault opening for lifting (removal). Unscrew (counterclockwise rotations) each filter cartridge from the underdrain connector. Roll the loose cartridge, on edge, to a convenient spot beneath the vault access.

Using appropriate hoisting equipment, attach a cable from the boom, crane, or tripod to the loose cartridge. Contact CONTECH Stormwater Solutions for suggested attachment devices.

Important: Note that cartridges containing leaf media (CSF) do not require unscrewing from their connectors. Take care not to damage the manifold connectors. This connector should remain installed in the manifold and could be capped during the maintenance activity to prevent sediments from entering the underdrain manifold.

B. Remove the used cartridges (up to 250 lbs. each) from the vault.

Important: Care must be used to avoid damaging the cartridges during removal and installation. The cost of repairing components damaged during maintenance will be the responsibility of the owner unless CONTECH Stormwater Solutions performs the maintenance activities and damage is not related to discharges to the system.

C. Set the used cartridge aside or load onto the hauling truck.

D. Continue steps a through c until all cartridges have been removed.

Method 2:

A. Enter the vault using appropriate confined space protocols.

B. Unscrew the cartridge cap.

C. Remove the cartridge hood screws (3) hood and float.

D. At location under structure access, tip the cartridge on its side.

Important: Note that cartridges containing media other than the leaf media require unscrewing from their threaded connectors. Take care not to damage the manifold connectors. This connector should remain installed in the manifold and capped if necessary.

D. Empty the cartridge onto the vault floor. Reassemble the empty cartridge.

E. Set the empty, used cartridge aside or load onto the hauling truck.

F. Continue steps a through e until all cartridges have been removed.

8. Remove accumulated sediment from the floor of the vault and from the forebay. This can most effectively be accomplished by use of a vacuum truck.
9. Once the sediments are removed, assess the condition of the vault and the condition of the connectors. The connectors are short sections of 2-inch schedule 40 PVC, or threaded schedule 80 PVC that should protrude about 1" above the floor of the vault. Lightly wash down the vault interior.
   a. If desired, apply a light coating of FDA approved silicon lube to the outside of the exposed portion of the connectors. This ensures a watertight connection between the cartridge and the drainage pipe.
   b. Replace any damaged connectors.
10. Using the vacuum truck boom, crane, or tripod, lower and install the new cartridges. Once again, take care not to damage connections.
11. Close and fasten the door.
12. Remove safety equipment.
13. Finally, dispose of the accumulated materials in accordance with applicable regulations. Make arrangements to return the used empty cartridges to CONTECH Stormwater Solutions.

Related Maintenance Activities -
Performed on an as-needed basis

StormFilter units are often just one of many structures in a more comprehensive stormwater drainage and treatment system.

In order for maintenance of the StormFilter to be successful, it is imperative that all other components be properly maintained. The maintenance/repair of upstream facilities should be carried out prior to StormFilter maintenance activities.

In addition to considering upstream facilities, it is also important to correct any problems identified in the drainage area. Drainage area concerns may include: erosion problems, heavy oil loading, and discharges of inappropriate materials.

Material Disposal

The accumulated sediment found in stormwater treatment and conveyance systems must be handled and disposed of in accordance with regulatory protocols. It is possible for sediments to contain measurable concentrations of heavy metals and organic chemicals (such as pesticides and petroleum products). Areas with the greatest potential for high pollutant loading include industrial areas and heavily traveled roads.

Sediments and water must be disposed of in accordance with all applicable waste disposal regulations. When scheduling maintenance, consideration must be made for the disposal of solid and liquid wastes. This typically requires coordination with a local landfill for solid waste disposal. For liquid waste disposal a number of options are available including a municipal vacuum truck decant facility, local waste water treatment plant or on-site treatment and discharge.

WALTER L. PHILLIPS INCORPORATED ESTABLISHED 1945
Engineers • Surveyors • Planners
Landscape Architects • Arborists
207 PARK AVENUE
FALLS CHURCH, VIRGINIA 22046
(703) 532-6163 Fax (703) 533-1301
www.WLPINC.com

SCALE: 1"=20' DATE: 8/25/14 DRAWN: CHECKED:

COMMONWEALTH OF VIRGINIA — KAREN L. S. WHITE Lic. No.041850 — 8/25/14 — PROFESSIONAL ENGINEER

REVISION APPROVED BY

NO.	DESCRIPTION	DATE	REV. BY	APPROVED	DATE

BEST MANAGEMENT PRACTICES DETAILS

THE KENSINGTON OF FALLS CHURCH
700 WEST BROAD STREET
CITY OF FALLS CHURCH, VIRGINIA

SHEET: **C-0704**

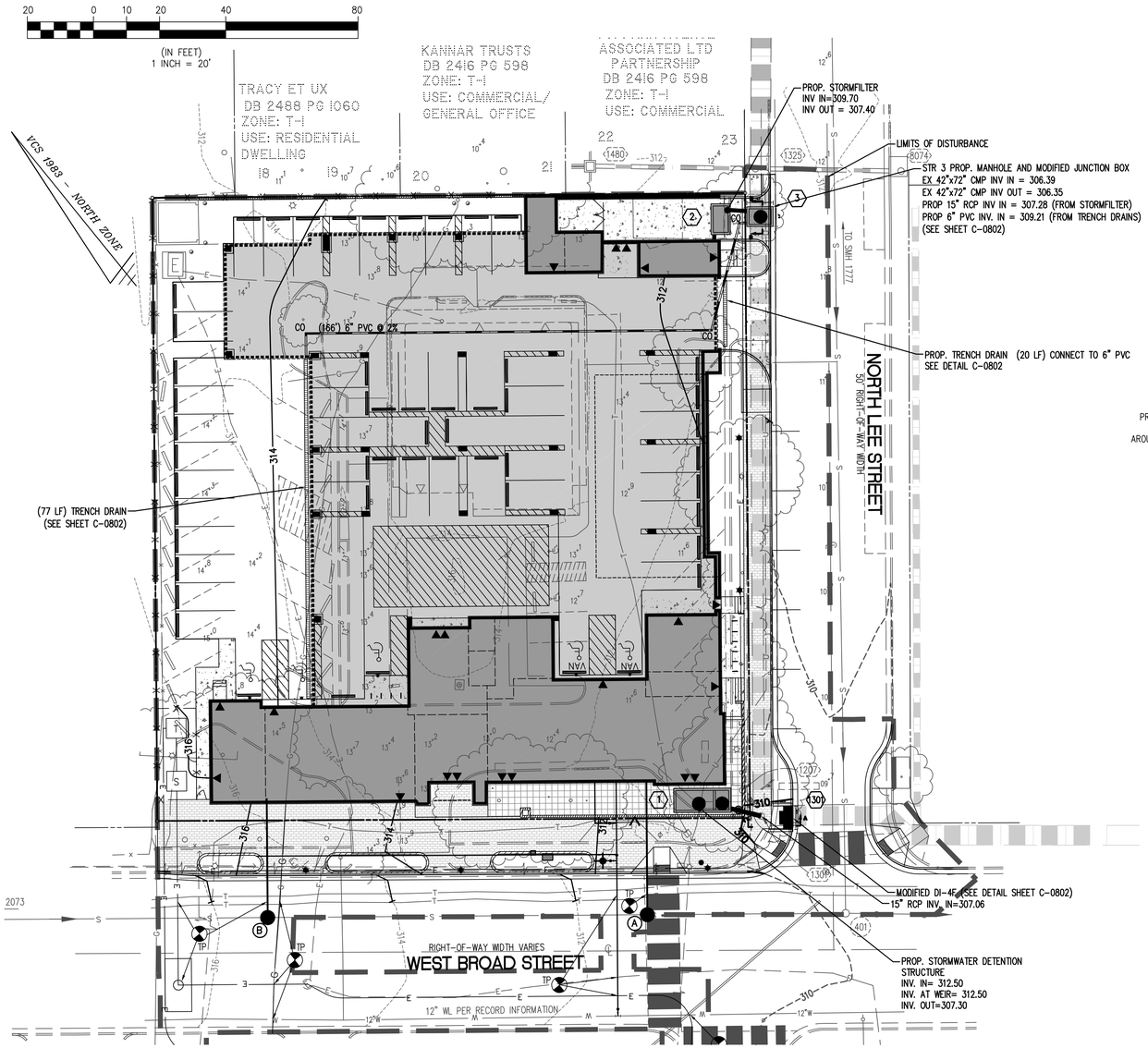

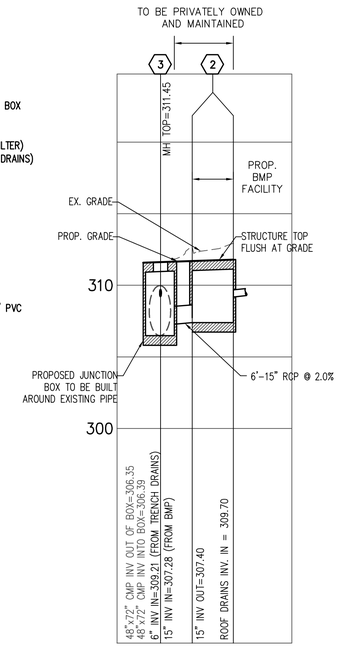

*SEE SHEET C-0802 FOR STR. 3 DETAIL

PROPOSED BMP FACILITY

SCALE:
HORIZONTAL= 1"=20'
VERTICAL= 1"=5'

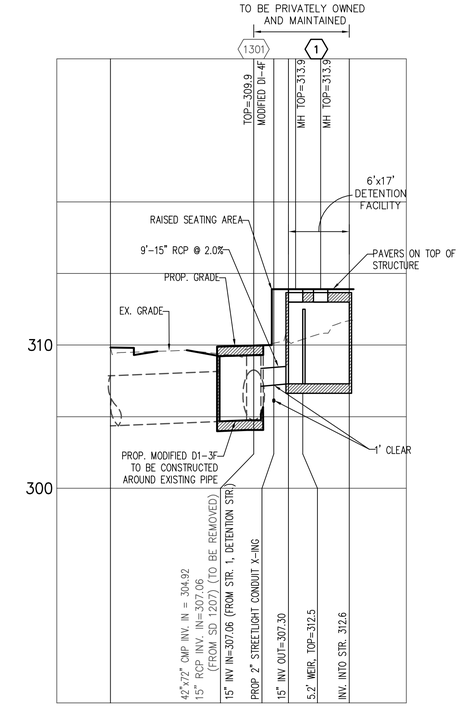

*SEE SHEET C-0802 FOR STR. 1301 DETAIL

PROPOSED STORM SEWER DETENTION

SCALE:
HORIZONTAL= 1"=20'
VERTICAL= 1"=5'

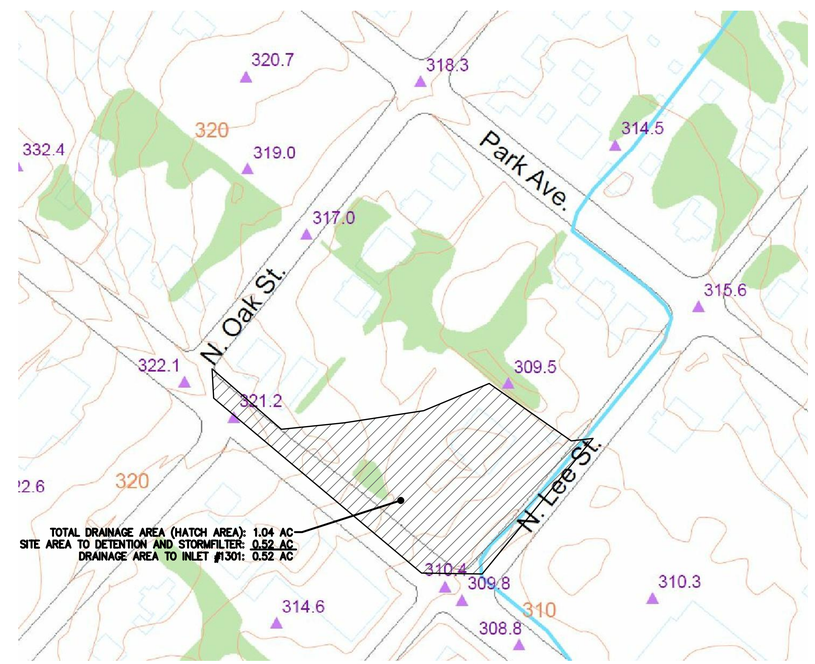

DRAINAGE TO INLET #1301

SCALE: 1"=80'

NOTE:
AREA EQUALS TOTAL DRAINAGE AREA MINUS THE PROPOSED AREA TO STORMFILTER AND DETENTION.

STORM SEWER COMPS

FROM POINT	TO POINT	AREA "A" ACRES	RUN-OFF COEF. C	CA INCRE-MENT	CA ACCUM-ULATED	INLET TIME MIN	RAIN FALL IN/HR	RUNOFF Q ACCUM-ULATED C.F.S.	INVERT ELEV'S UPPER END	INVERT ELEV'S LOWER END	LENGTH FT.	SLOPE FT./FT.	MANNING'S 'n'	DIA. IN.	CAPA-CITY C.F.S.
2	3	0.40	0.90	0.36	0.36	5.00	7.27	2.62	307.40	307.28	6	0.0200	0.013	15	9.09
1	1301	0.12	0.90	0.11	0.11	5.00	7.27	0.435*	307.30	307.06	9	0.0267	0.013	15	10.50

*RELEASE CONTROLLED BY DETENTION STRUCTURE

INLET COMPUTATIONS

INLET NUMBER	TYPE	LENGTH (FT.)	STATION	DRAINAGE AREA (AC.)	C	CA	Σ CA	intensity	Q INCR. (CFS)	Q_b CARRYOVER (CFS)	Qt, GUTTERFLOW	S, GUTTER SLOPE (FT/FT)	Sx, CROSS SLOPE (FT/FT)	T, (SPREAD)	W (FT)	W/T	Sw (FT/FT)	Sw/Sx	Eo (App. 9C-8)	a = 12W(SW-SX) + LOCAL DEPRESSION	S' w= a/(12W)	Se= Sx + S' w(Eo) (FT/FT)	COMPUTED LENGTH, Lt, (FT) (App. 9C-17)	L, SPECIFIED LENGTH (FT)	L/Lt	E (App. 9C-18)	Q, INTERCEPTED (CFS)	Q_b, CARRYOVER (CFS)
1	2	3	4	5	6	7	8	9	10	11	12	13	14	15	16	17	18	19	20	21	22	23	24	25	26	27	28	29
1301	DI-4F	8	0+00	0.52	0.85	0.44	0.44	7.27	3.21	0.00	3.21	0.03	0.01	7.10	1.50	0.21	0.08	6.41	-	-	-	-	-	8	-	-	3.21	0.00

File No. CC-6 Tax Map No. Job No. 13-014 Cadd Dwg. File: Q:\sdskproj\13014\dwg\Engineering\Site Plan\13014C-0801.dwg

WALTER L. PHILLIPS INCORPORATED
ESTABLISHED 1945
Engineers • Surveyors • Planners
Landscape Architects • Arborists
207 PARK AVENUE
FALLS CHURCH, VIRGINIA 22046
(703) 532-6163 Fax (703) 533-1301
www.WLPINC.com

DRAWN: DE/KW
CHECKED: KLW
DATE: 6/26/14
SCALE: AS NOTED

COMMONWEALTH OF VIRGINIA
KAREN L. S. WHITE
Lic. No.041850
8/25/14
PROFESSIONAL ENGINEER

REVISION APPROVED BY				
NO.	DESCRIPTION	DATE	REV. BY	APPROVED	DATE

STORM SEWER PROFILES
THE KENSINGTON OF FALLS CHURCH
700 WEST BROAD STREET
CITY OF FALLS CHURCH, VIRGINIA

SHEET: C-0801

NEENAH FOUNDRY

R-4995 & R-4996

Type M Trench Frame with Solid or Grated Cover

Cast iron trench assemblies—light or heavy duty—for use in sidewalks, driveways, garages, loading docks, etc.

Read Carefully Before Ordering

Specify:

- Complete catalog number.
- Light or heavy duty.
- Overall length of cover required.
- Lid solid, flat grated, or diagonally barred convex grate.
- Location of outlet, side, bottom or end (give dimensional location and pipe size).
- Whether one end or both ends are able to be open or closed.

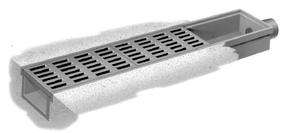

Illustrating Type M frame with grated cover. Standard with 4-inch outside caulk outlet. Can be equipped for inside caulk if specified.

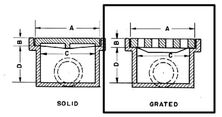

Trench covers are used over areas requiring long drainage assemblies. Can be supplied in a variety of sizes and lengths to meet special needs. For trenches of irregular pattern, arrangements can be made to furnish cover to fit.

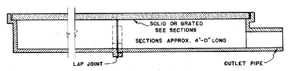

Sections: Thru Drains, Type M

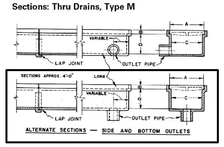

Standard 4-inch outlet at end of drain. Special size outlets are available on special order. Side and bottom outlets optional and furnished only when specified.

Catalog Number	Description	A	B	C	D	Length
Standard Sizes—Light Duty						
R-4995-A1 **	with grated cover	11-1/2	3/4	10	6-3/4	as ordered
R-4995-A2 *	with grated cover	7	3/4	5	4-3/4	as ordered
R-4995-B1	with solid cover	11-1/2	3/4	10	6-3/4	as ordered
R-4995-B2	with solid cover	7	3/4	5	4-3/4	as ordered
Standard Sizes—Heavy Duty						
R-4996-A1 **	with grated cover	11-1/2	1-1/2	10	6	as ordered
R-4996-A2 *	with grated cover	7	1-1/4	5	4-1/4	as ordered
R-4996-B1	with solid cover	11-1/2	1-1/2	10	6	as ordered
R-4996-B2	with solid cover	7	1-1/4	5	4-1/4	as ordered

Above standard frames made in 4ft. sections, covers in 2ft. lengths.
*** Available with type B grate only.**
**** Also available with type P grate.**

© 2014 Neenah Foundry, all rights reserved.

NOTE: TRENCH DETAIL FOR SURFACE PARKING LOT AND PARKING ENTRANCE (BOTTOM OUTLET TO BE CHOSEN)

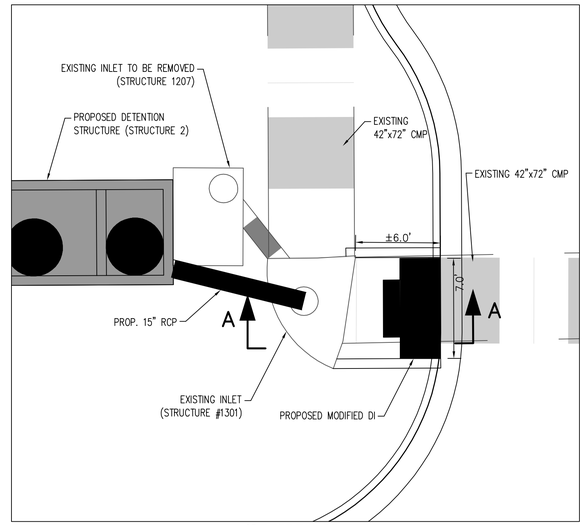

PLAN VIEW

SCALE: 1"=5'

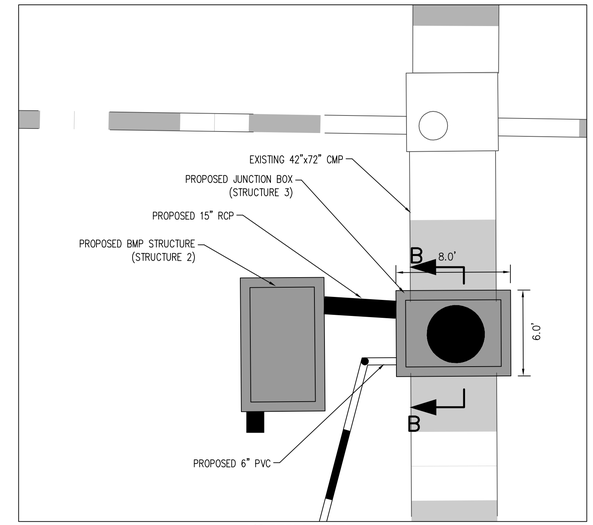

PLAN VIEW

SCALE: 1"=5'

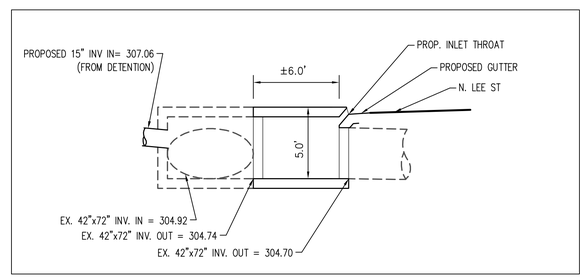

SECTION A-A

SCALE: 1"=5'

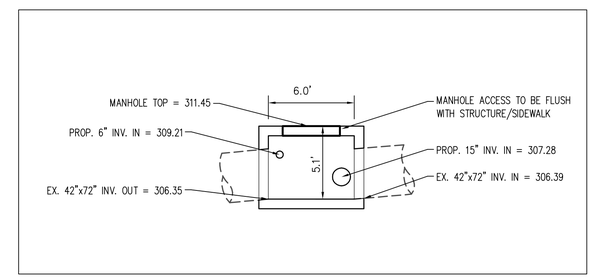

SECTION B-B

SCALE: 1"=5'

MODIFIED PROP. DI-4F (MODIFIED STRUCTURE #1301)

NOTE: THIS IS A SCHEMATIC DETAIL. THE PROPOSED STRUCTURE IS TO BE DESIGNED BY A STRUCTURAL ENGINEER.

MODIFIED PROP. JB-1 (PROPOSED STRUCTURE #3)

NOTE: THIS IS A SCHEMATIC DETAIL. THE PROPOSED STRUCTURE IS TO BE DESIGNED BY A STRUCTURAL ENGINEER.

WALTER L. PHILLIPS INCORPORATED
ESTABLISHED 1945
Engineers • Surveyors • Planners
Landscape Architects • Arborists
207 PARK AVENUE
FALLS CHURCH, VIRGINIA 22046
(703) 532-6163 Fax (703) 533-1301
www.WLPINC.com

DRAWN: BE/VKA
CHECKED: VAW
SCALE: AS NOTED
DATE: 6/26/14

COMMONWEALTH OF VIRGINIA
KAREN L.S. WHITE
Lic. No.041850
8/25/14
REGISTERED PROFESSIONAL ENGINEER

REVISION APPROVED BY				
NO.	DESCRIPTION	DATE	REV. BY	APPROVED	DATE

STORM DETAILS

THE KENSINGTON OF FALLS CHURCH

700 WEST BROAD STREET
CITY OF FALLS CHURCH, VIRGINIA

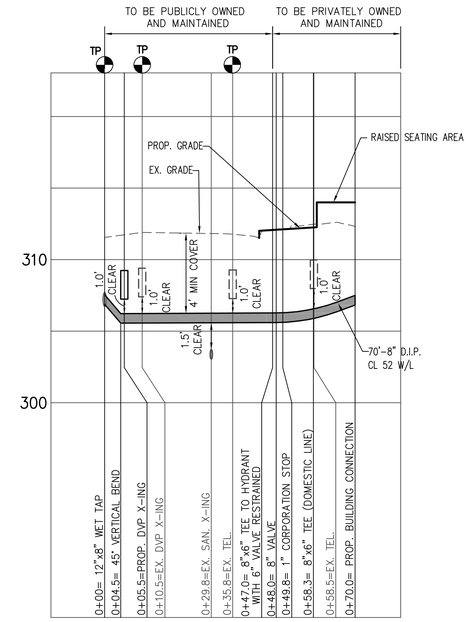

PROPOSED FIRE LINE

SCALE:
HORIZONTAL= 1"=20'
VERTICAL= 1"=5'

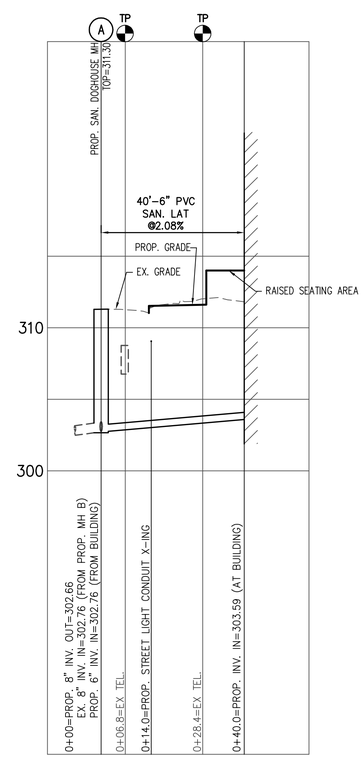

PROPOSED SAN. LAT A

SCALE:
HORIZONTAL= 1"=20'
VERTICAL= 1"=5'

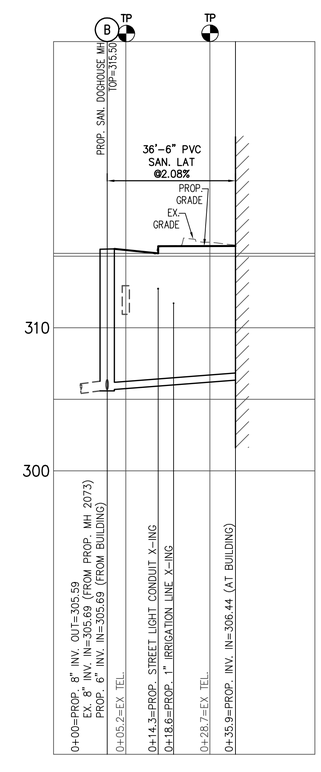

PROPOSED SAN. LAT B

SCALE:
HORIZONTAL= 1"=20'
VERTICAL= 1"=5'

NOTE:
CONTRACTOR TO PROVIDE TEST PIT INFORMATION 90 DAYS PRIOR TO CONSTRUCTION

WALTER L. PHILLIPS INCORPORATED
ESTABLISHED 1945
Engineers • Surveyors • Planners
Landscape Architects • Arborists
207 PARK AVENUE
FALLS CHURCH, VIRGINIA 22046
(703) 532-6163 Fax (703) 533-1301
www.WLPINC.com

COMMONWEALTH OF VIRGINIA
KAREN L. S. WHITE
Lic. No.041850
8/25/14
PROFESSIONAL ENGINEER

DRAWN: BE/KDA
CHECKED: KLSW
SCALE: AS NOTED
DATE: 8/25/14

REVISION APPROVED BY				
NO.	DESCRIPTION	DATE	REV. BY	APPROVED

UTITLITY PROFILES

THE KENSINGTON OF FALLS CHURCH

700 WEST BROAD STREET
CITY OF FALLS CHURCH, VIRGINIA

TRUCK ROUTE MAP

N.T.S.

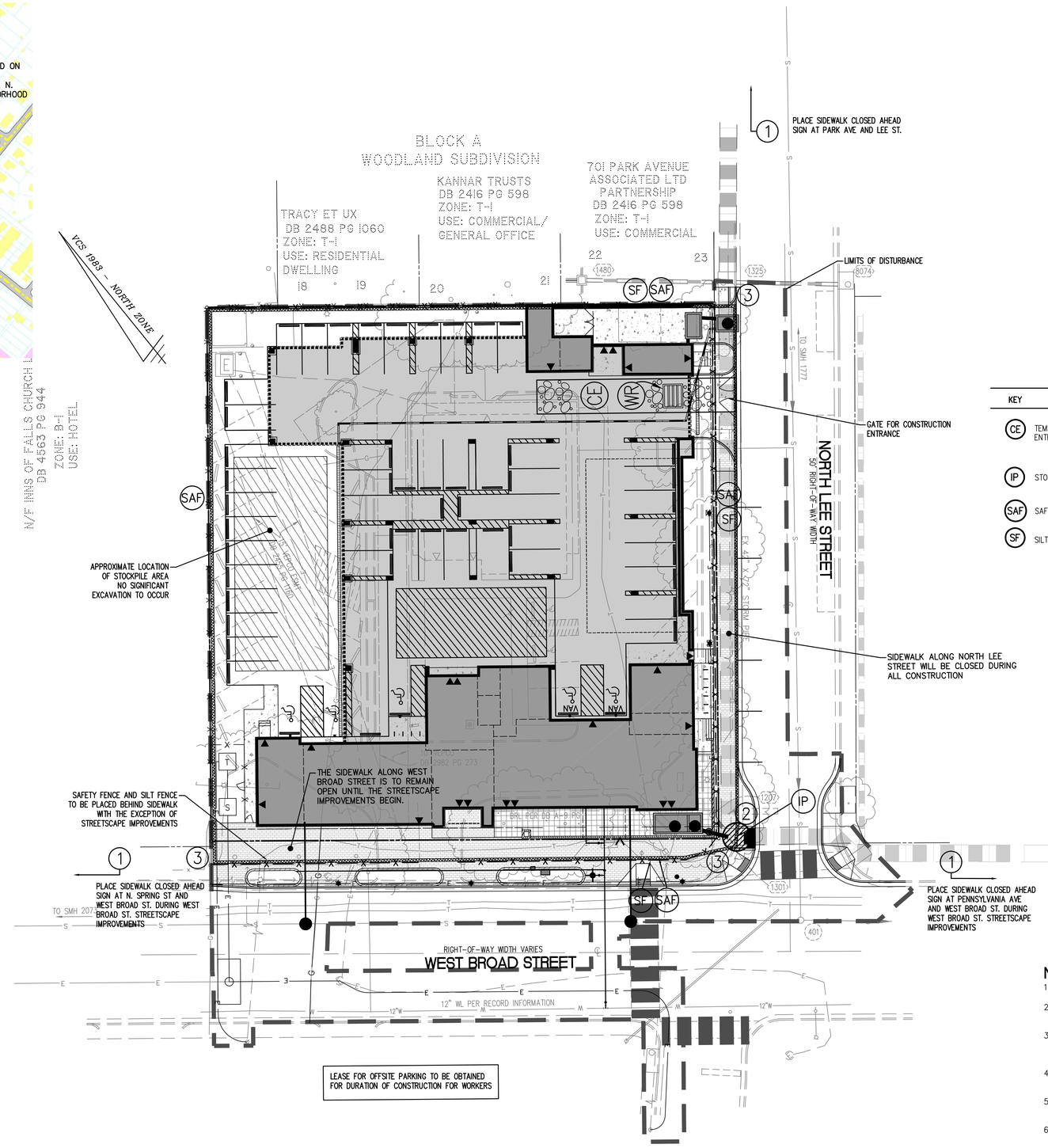

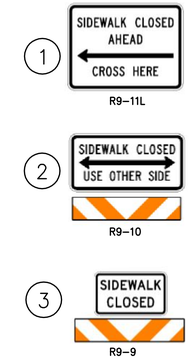

KEY	TITLE	SYMBOL
CE	TEMPORARY GRAVEL CONSTRUCTION ENTRANCE WITH WASH RACK	
IP	STORM DRAIN INLET PROTECTION	
SAF	SAFETY FENCE	
SF	SILT FENCE	—x—x—

NOTES:

1. ALL TRAFFIC SIGNS MUST MEET MUTCD STANDARDS.
2. ALL TRAFFIC SIGNS MUST BE INSPECTED BY CITY'S STAFF PRIOR TO CONSTRUCTION.
3. PERMITTED CONSTRUCTION HOURS ARE 7:00 AM THROUGH 9:00 MONDAY THROUGH FRIDAY AND 9:00 AM THROUGH 9:00 PM ON WEEKENDS AND HOLIDAYS.
4. NO LANE CLOSURES ON WEST BROAD STREET BEFORE 9:00 AM AND AFTER 3:00 PM.
5. NO CONSTRUCTION MATERIALS OR EQUIPMENT ON BROAD ST.
6. ALL CONSTRUCTION TRAFFIC TO ENTER N. LEE ST. FROM W. BROAD ST. NO CONSTRUCTION TRUCKS WILL BE ALLOWED ON PARK AVENUE.
7. SIDEWALK ALONG NORTH LEE STREET WILL BE CLOSED DURING ENTIRE CONSTRUCTION PERIOD.
8. THE SIDEWALK ALONG WEST BROAD STREET IS TO REMAIN OPEN EXCEPT FOR THE CONSTRUCTION OF STREETSCAPE IMPROVEMENTS.

WALTER L. PHILLIPS INCORPORATED
ESTABLISHED 1945
Engineers • Surveyors • Planners
Landscape Architects • Arborists
207 PARK AVENUE
FALLS CHURCH, VIRGINIA 22046
(703) 532-6163 Fax (703) 533-1301
www.WLPINC.com

DRAWN: BE/KKA
CHECKED: VSK
SCALE: 1"=20'
DATE: 8/25/14

COMMONWEALTH OF VIRGINIA
KAREN L.S. WHITE
Lic. No.041850
8/25/14
PROFESSIONAL ENGINEER

REVISION APPROVED BY

NO.	DESCRIPTION	DATE	REV. BY	APPROVED	DATE

CONSTRUCTION MANAGEMENT PLAN

THE KENSINGTON OF FALLS CHURCH

700 WEST BROAD STREET
CITY OF FALLS CHURCH, VIRGINIA

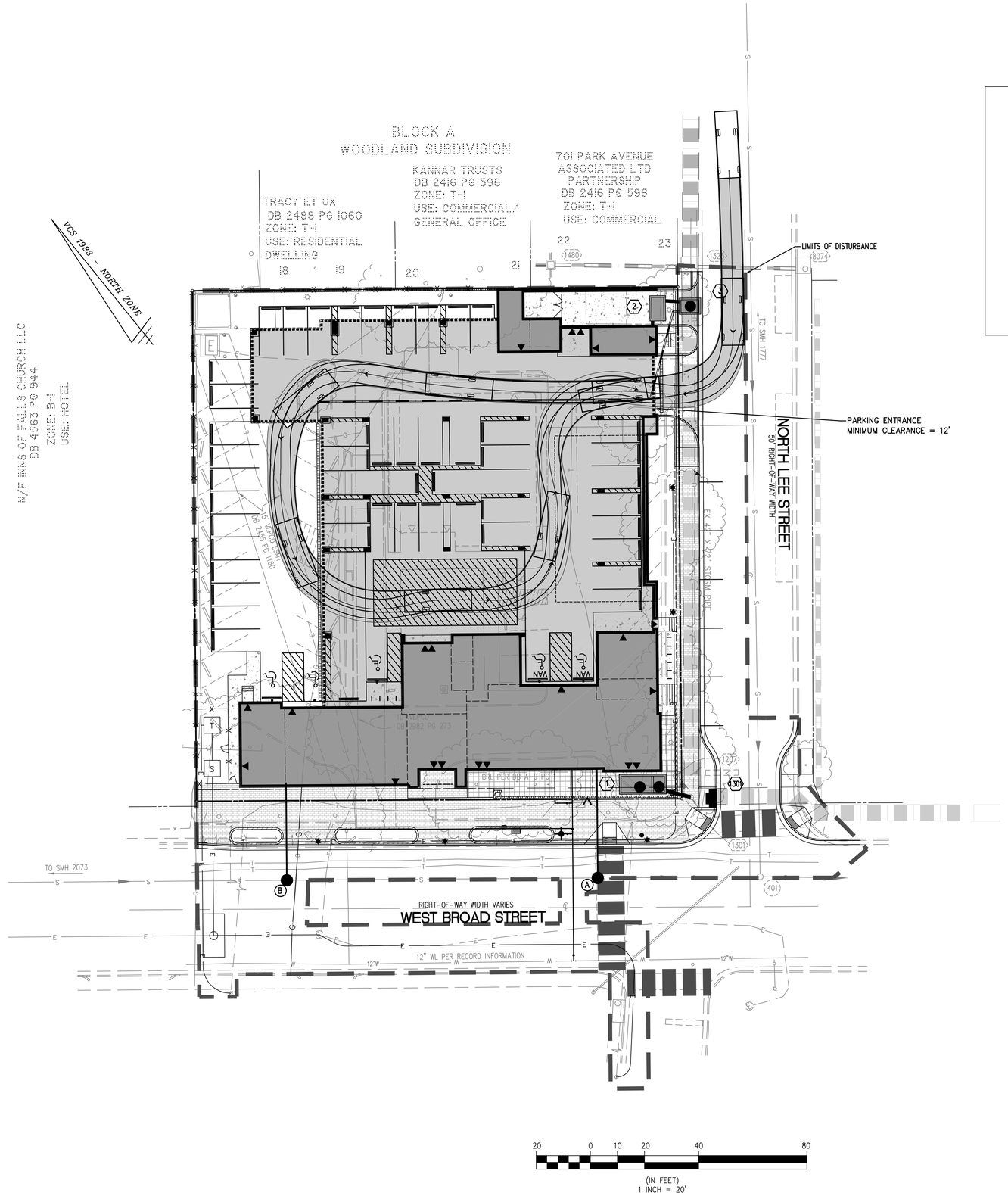

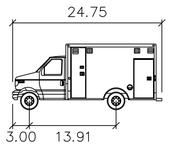

MEDIC UNIT

	feet
Width	: 8.25
Track	: 7.75
Lock to Lock Time	: 6.00
Steering Angle	: 37.7

WALTER L. PHILLIPS INCORPORATED
ESTABLISHED 1945
Engineers • Surveyors • Planners
Landscape Architects • Arborists
207 PARK AVENUE
FALLS CHURCH, VIRGINIA 22046
(703) 532-6163 Fax (703) 533-1301
www.WLPINC.com

DRAWN: BE/KCA
CHECKED: VMF
SCALE: 1"=20'
DATE: 8/26/14

COMMONWEALTH OF VIRGINIA
KAREN L. S. WHITE
Lic. No.041850
8/25/14
PROFESSIONAL ENGINEER

REVISION APPROVED BY

NO.	DESCRIPTION	DATE	REV. BY	APPROVED	DATE

MEDIC UNIT AUTOTURN

THE KENSINGTON OF FALLS CHURCH

700 WEST BROAD STREET
CITY OF FALLS CHURCH, VIRGINIA

Tree Inventory - 700 West Broad St. - Falls Church, VA

Tree #	Botanical Name	Common Name	Size DBH (in)	Critical Root Zone (CRZ) Radius (ft)	Species Rating (%)	Condition %	Native	Removal	Tree Protection Fence/ Super Silt Fence	Notes
Tree Survey Information Completed by Walter Phillips, Inc - Arborist Ben Schitter- ISA # MA-5385A #13-014 07 July 2014										
100	Fraxinus pennsylvanica	Green ash	24"	36'	25%	44%	X		X	Offsite, Vines
101	Acer rubrum	Red maple	23"	35'	55%	50%	X		X	Offsite, co-dominant, vines
102	Fraxinus pennsylvanica	Green ash	3"	8'	25%	56%	X		X	Offsite
103	Juglans nigra	Black walnut	12"	18'	55%	56%	X	X		vines
104	Pyrus calleryana	Callery pear	6"	9'	20%	50%		X		
105	Acer rubrum	Red maple	15"	23'	55%	44%	X	X		girdled roots, deadwood
106	Ulmus americana	American elm	4"	8'	35%	50%	X	X		dieback
107	Acer rubrum	Red maple	9"	14'	55%	44%	X	X		lean, vines
108	Acer rubrum	Red maple	10"	15'	55%	50%	X	X		
109	Acer rubrum	Red maple	17"	26'	55%	47%	X	X		Tight space
110	Juniperus virginiana	Eastern redcedar	4"	8'	60%	63%	X	X		
111	Platanus hybrida x acerifolia	London plane tree	12"	18'	50%	59%		X		
112	Juniperus virginiana	Eastern redcedar	4"	8'	60%	63%	X	X		
113	Platanus hybrida x acerifolia	London plane tree	12"	18'	50%	59%		X		minor deadwood
114	Juniperus virginiana	Eastern redcedar	5"	8'	60%	63%	X	X		
115	Tilia cordata	Littleleaf linden	15"	23'	60%	38%		X		in ROW, very large wound in trunk
116	Tilia cordata	Littleleaf linden	18"	27'	60%	41%		X		in ROW, large cavity/ hollow
117	Tilia cordata	Littleleaf linden	23"	35'	60%	50%		X		in ROW, deadwood
118	Platanus hybrida x acerifolia	London plane tree	14"	21'	50%	59%		X		deadwood/dieback
119	Pyrus calleryana	Callery pear	6"	9'	20%	47%		X		deadwood
120	Pyrus calleryana	Callery pear	8"	12'	20%	47%		X		deadwood
121	Acer saccharum	Sugar maple	17"	26'	60%	47%	X		X	Offsite
122	Catalpa speciosa	Northern catalpa	8"	12'	30%	47%	X		X	Offsite
123	Catalpa speciosa	Northern catalpa	4"	8'	30%	47%	X		X	Offsite
124	Catalpa speciosa	Northern catalpa	5"	8'	30%	53%	X		X	Offsite
125	Nyssa Sylvatica	Blackgum	5"	8'	70%	63%	x		x	Offsite

DBH = Diameter at Breast Height (measured 4.5 feet above ground)

CRZ = Critical Root Zone = 1.5 foot radius per inch of tree diameter

CRZ values for trees with multiple stems were calculated using the diameter of a tree with the basal area equivalent to the sum of the basal areas for all stems.

Condition Ratings provided as percentages based on methods outlined in the 9th edition of the Guide for Plant Appraisal, published

TREE PRESERVATION AND LANDSCAPE PLAN PREPARED BY:

07/07/2014

BENJAMIN J. SCHITTER, CERTIFIED ARBORIST ISA #MA-5385A

LEGEND

- RP — ROOT PRUNING
- TP — TREE PROTECTION
- CRZ –CRITICAL ROOT ZONE (TREE TO BE SAVED)
- X — TREE TO BE REMOVED INCLUDING CRZ
- EXISTING TREELINE
- LIMITS OF CLEARING AND GRADING

NOTE:
CITY ARBORIST TO MONITOR DEMOLITION WORK ALONG PROPERTY LINE CITY. CITY ARBORIST RESERVES THE RIGHT TO DETERMINE EXISTING TREES TO BE HAZARDOUS IF AFFECTED BY CONSTRUCTION TO BE REMOVED.

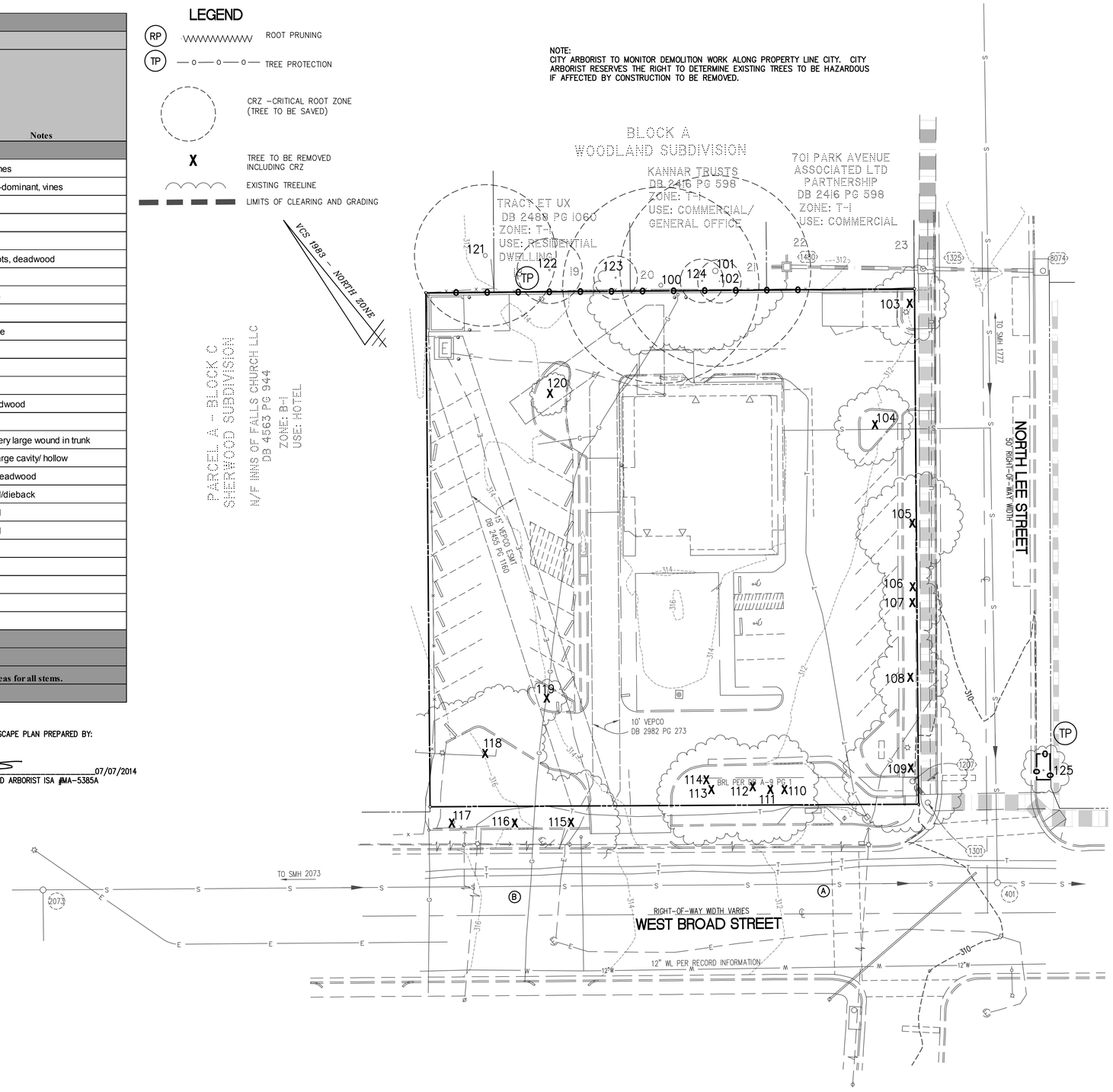

20 0 10 20 40 80

(IN FEET)
1 INCH = 20'

Engineers • Surveyors • Planners
Landscape Architects • Arborists
207 PARK AVENUE
FALLS CHURCH, VIRGINIA 22046
(703) 532-6163 Fax (703) 533-1301
www.WLPINC.com

WALTER L. PHILLIPS INCORPORATED
ESTABLISHED 1945

COMMONWEALTH OF VIRGINIA
KAREN L. S. WHITE
Lic. No.041850
8/25/14
PROFESSIONAL ENGINEER

DRAWN: BS, NOA
CHECKED: KW
SCALE: 1"=20'
DATE: 8/25/14

REVISION APPROVED BY					
NO.	DESCRIPTION	DATE	REV. BY	APPROVED	DATE

TREE INVENTORY & PRESERVATION PLAN

THE KENSINGTON OF FALLS CHURCH

700 WEST BROAD STREET
CITY OF FALLS CHURCH, VIRGINIA

TREE PRESERVATION PROCEDURES AND SPECIFICATIONS
City of Falls Church, VA – Urban Forestry / Development Services

1. Prior to allowing any vehicle or construction equipment to enter the site, the construction foreman and project arborist (also foreman of company doing actual tree work if different from project arborist) is to meet the City Arborist to mark the location of the *limits of clearing/ tree preservation fencing*, erosion control fabric, and root pruning line (where required), access routes, storage areas, and parking areas. The location of the LIMITS OF CLEARING/TREE PRESERVATION FENCING is to be installed in accordance with the approved plan and field located from existing benchmarks, landmarks, and building stakeout survey markers. All work procedures and tree preservation measures are to be discussed at this time. An appointment must be made with the arborist for the City a minimum of three days prior to the establishment of the tree preservation measures is required by City Code (Sec. 35-15 (b), see enclosed. Contact the City Arborist for an appointment at 703-248-5183.

2. Trees to be removed shall be clearly marked and approved by the City Arborist prior to demolition or entry of any equipment on site. A tree contractor licensed and bonded to work in the City shall perform all tree work, including all tree removals. Check with the City Arborist for a copy of the most recent list of Tree Contractors.

3. *Tree preservation fencing* shall be either of the following:

   a. Six (6) foot high chain link fence sections attached to one and five eights (1 5/8) inch outside diameter pipe with eleven (11) -gauge mesh in a two (2) inch diamond pattern. The fencing noted above may be temporary panels set in concrete blocks at the base and secured at the top with saddle clamps
   or
   b. Four (4) foot high fourteen (14) gauge welded wire fence supported by six (6) foot long metal stakes (2" width) to be spaced eight (8) feet on center and sunk into the ground.

   Both of the fencing types noted above shall be flagged with brightly colored surveyor ribbon to improve their visibility. The contractor must maintain fencing in place throughout construction. **In the event fencing must be temporarily removed for any reason, contact must be made first with the arborist at 703-248-5183**. The City Arborist must grant approval before any tree preservation fencing is removed, even temporarily.

4. Erosion and sediment control fencing shall be placed on the inside (toward construction) from the tree preservation fencing and any root-pruning trenches.
   Erosion control devices such as silt fencing, debris basins, and water diversion structures shall be installed to prevent siltation and/or erosion within the tree protection zone.
   Property owners are advised to impose fines in contracts with construction companies if tree preservation measures are violated.

5. Demolition and Site Clearing:

   a. The City Arborist shall be notified a minimum of three (3) days in advance of commencing any form of tree work. Call 703-248-5183 for an appointment.

   b. Trees to be removed shall be felled so as to fall away from tree protection zones and to avoid pulling breaking of roots of trees to remain. If roots are entwined, the consultant may require first severing the major woody root mass before extracting the trees. This may be accomplished by cutting through the roots by hand, with a vibrating knife, rock saw, and narrow trencher with sharp blades, or other approved root-pruning equipment.
   c. Trees being cut within the tree preservation zone shall be cut near ground level and the stumps ground out with a walk-behind grinding machine.
   d. All downed brush and trees shall be removed from the tree protection zone either by hand or with equipment sitting outside the tree protection zone. Extraction shall occur by lifting the material out, not by skidding it across the ground.
   e. Brush shall be chipped and placed in the tree protection zone to a depth of 6 inches, with no chips against the trunks of trees.
   f. Structures and underground features to be removed within the tree protection zone shall use the smallest equipment possible and operate from outside the tree protection zone. The City Arborist shall be present during all such operations within the tree protection zone to monitor demolition activity. Phone 703-248-5183 at least three (3) days in advance for an appointment.
   g. Any damage to trees due to demolition activities shall be reported to the City Arborist within 6 hours so that prompt remedial action can be taken.
   h. If temporary haul or access roads must pass over the root area of trees to be retained, a roadbed of at least 10 inches of mulch shall be created to protect the soil. The roadbed material shall be replenished as necessary to maintain a10-inch depth. The City Arborist must approve the use of any such temporary road in the tree protection area.

6. Pruning & Other Preservation Measures Specifications:
   a. The City Arborist shall be notified a minimum of three (3) days in advance of commencing any form of tree work. Call 703-248-5183 for an appointment.
   b. Root pruning, where required, shall be mechanically done with a narrow trencher with sharp blades. Once a trench is opened up, approximately 18-24" in depth and 4" wide all exposed roots will be hand pruned so that the clean-cut ends can regrow.
   The tree preservation fencing shall be placed 6-12" outside the root-pruning trench (construction side of the trench). The erosion and sediment fencing shall be placed outside the tree preservation fencing (construction side of the fence).
      - Where required, apply a slow-release complete fertilizer containing major and trace elements, but low in water-soluble nitrogen during the season before the commencement of construction. An application of a *mychorrizae* product may also be required to assist in the preservation of highly stressed trees.
   c. All trees to be saved will be pruned (in accordance with American National Standards Institute (ANSI) Standard Practices for Trees, Shrubs, and Other Woody Plan Maintenance ANSI A300 and adhere to the most recent edition of ANSI Z133.1.
   d. Treat any disease or insect pest as required to reduce stress on trees.
   e. Remove all invasive vines growing on trees and from the area around the trees
   f. Specifications for work to be performed on individual trees shall be indicated under the "maintenance" column of the Tree Survey.
   g. All trees within the project area shall be pruned to:
      - clear the crown of diseased, crossing, weak, and dead wood to a minimum size of 1 ½ inches diameter;
      - provide 14 feet of vertical clearance over streets and 8 feet over sidewalks;
      - remove stubs, cutting outside the woundwood tissue that has formed around the branch;
      - reduce end weight on heavy, horizontal branches selectively removing small diameter branches, no greater than 2 to 3 inches near the ends of the scaffolds.
   h. Where temporary clearance is needed for access, branches shall be tied back to hold them out of the clearance zone. The City Arborist must approve such tying.
   i. Pruning shall not be performed during periods of flight of adult boring insects because fresh wound attract pests. Pruning shall be performed only when the danger of infestation is past.
   j. All work must be performed by a tree contractor licensed and bonded to work in the City and in accordance with the direction of the project certified arborist and the City Arborist.
   k. Interior branches shall not be stripped out.
   l. Pruning cuts larger than 4 inches in diameter, except for dead wood, shall be avoided.
   m. Pruning cuts that expose heartwood shall be avoided whenever possible.
   n. No more than 20 percent of live foliage shall be removed from a tree at on time.
   o. While in the tree, the arborist shall perform an aerial inspection to identify defects that require treatment. Any addition work needed shall be reported to the City Arborist.
   p. Brush shall be chipped and chips shall be spread underneath trees within the tree protection zone to a maximum depth of 6 inches, leaving the trunk and root flare clear of chips.
   q. It may also be necessary to fertilize, aerate and otherwise treat the "trees to be saved" as required by the arborist for the City, following a meeting with the owner's/developer's arborist and approval of the "tree preservation plan". <u>All tree work must be completed prior to construction.</u>
   r. 'Selective clearing' in wooded areas will be allowed only under the direction of the City Arborist. Trees to be removed will be felled by hand so that minimal damage is done to "trees to be saved".
   s. No vehicles or storage of materials of any kind will be allowed inside the limits of clearing. No storage of material or debris will be allowed within the "tree save area". No burning will be allowed on site.
7. Construction Specifications:
   a. Supplemental water shall be supplied to trees being preserved when natural rainfall is less than 1" a week, from early spring until the ground freezes in the fall. Irrigation should be designed to wet the soil to a depth of 2-3 feet. Lacking a source of water early on the construction site, this may be accomplished by constructing a 6" berm around the tree protection zone and filling the basin with a water truck or by injecting the soil using a pressure system from a truck mounted water tank. Shallow frequent watering should be avoided
   b. Have a licensed and bonded tree contractor remove torn, hazardous, or prominent deadwood as it occurs, using ANSI standards noted under # 4 above. .
   c. Where construction traffic must occur in the area of tree roots it shall be necessary to apply the following procedure: cover undisturbed soil with 10-15 inches wood chips and topped with chain link fence pulled taught and anchored or topped with 5/8 to 3/4 inch plywood with non-skid surface.
   d. Where compaction occurs during construction, vertical mulch with good quality compost.
   e. Before grading, pad preparation, or excavation for foundations, footings, walls, or trenching, relevant trees shall be root pruned 1 foot outside the tree protection zone by cutting all roots cleanly to a depth of 24 inches to the maximum depth of root penetration, (usually 3 feet). Roots shall be cut by manually digging a trench and cutting exposed roots with a saw, vibrating knife, rock saw, narrow trencher with sharp blades, or other approved root-pruning equipment. Pruned roots shall be promptly covered with soil.
   f. Any roots damaged during grading or construction shall be exposed to sound tissue and cut leanly with a saw and promptly covered with moist soil.
   g. Soil from trenches, basements or other excavations shall not be placed within the tree protection zone, either temporarily or permanently. Soil stockpiles should be placed only in previously designated areas. No vehicles or construction equipment shall be parked in the tree protection zone.
   h. No burn piles or debris pits shall be placed within the tree protection zone. No ashes, debris or garbage may be dumped or buried within the tree protection zone. No materials of any kind shall be stored in the tree protection zone.
   i. Maintain fire-safe areas around fenced areas. Also, no heat sources, flames, ignition sources, or smoking is allowed near mulch of trees.
   j. A copy of the "approved plan" and TREE PRESERVATION PROCEDURES AND SPECIFICATIONS must be maintained on site at all times.
   k. All underground utilities and drain or irrigation lines shall be routed outside the tree protection zone. If lines must traverse the protection area, they shall be tunneled or bored under the tree(s) with the approval of the City Arborist.
   l. A licensed and bonded tree contractor must perform additional tree pruning required for clearance during construction under the direction of the City Arborist. Construction workers shall not be allowed to prune trees.
   m. Any herbicides placed under paving materials must be safe for use around trees and labeled for that use. Any pesticides used on site must be tree-safe and not easily transported by water.
   n. If injury should occur to any tree during construction, it should be treated as soon as possible under the direction of the City Arborist.
   o. The City Arborist must monitor any grading, construction, demolition, or other work that is expected to encounter tree roots.
   p. At the completion of construction (and all equipment has been removed from site), notify the City Arborist for an inspection before removing the tree preservation fencing. At this time, all trees will be inspected and any repairs needed will be stipulated by the City and promptly made by the Contractor. (Refer to Sec. 35-15(b) of the City Code for guidance on finalizing the requirements of the bond agreement.

8. The planting of the new tree(s) specified on the plan shall take place after the completion of construction. The City Arborist must inspect the trees prior to planting (see Arborist Notification) and also inspect the placement and installation of the tree(s). All products and workmanship related to the planting of the tree(s) must be in accordance with the **Tree Planting Specifications** attached. The Contractor/Owner must present the City with a copy of a one-year guarantee from the landscape contractor for the newly planted tree(s). The tree will need to be thriving and in good condition one year from the date of planting or will need to be replaced.

If you have questions on any of the "procedures" or "specifications" noted above or concerns that may arise during construction, please contact the City Arborist at (703) 248-5183 or the Senior Urban Forester at (703) 248-5016.

ARBORIST NOTIFICATION AND VERIFICATION:

PRIOR TO THE SIGN OFF AND SUBSEQUENT RELEASE OF THE GRADING PLAN ALL PRESERVATION MEASURES REQUIRED, AS PART OF THE *LANDSCAPE CONSERVATION PLAN*, MUST BE INSPECTED AND APPROVED BY THE CITY OF FALLS CHURCH ARBORIST. THIS MAY INCLUDE BUT IS NOT LIMITED TO TREE WORK, FENCING, MULCHING AND ROOT PRUNING. <u>VIOLATIONS</u> OF THE *LANDSCAPE CONSERVATION PLAN* SHALL RESULT IN FINES, STOP WORK ORDERS AND/OR THE RESUBMISSION OF A "MITIGATION PLAN".
THE REQUIRED REPLACEMENT VEGETATION SHALL BE INSPECTED PRIOR TO PLANTING BY THE CITY ARBORIST. VEGETATION THAT IS INSTALLED UN INSPECTED WILL BE REJECTED. TO ARRANGE AN APPOINTMENT CALL THE SENIOR URBAN FORESTER (703) 248-5016.

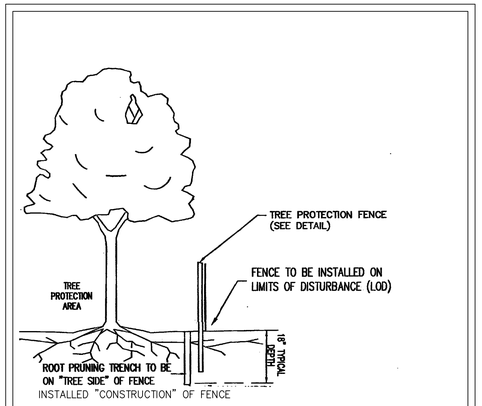

NOTE:

TREE PROTECTION AREA WILL BE DETERMINED AS PART OF THE PLAN REVIEW PROCESS.

EXACT LOCATION OF TREE PROTECTION AREAS SHALL BE STAKED OR FLAGGED PRIOR TO TRENCHING BY APPLICANT.

TRENCH SHALL BE BACKFILLED IMMEDIATELY.

ROOTS SHALL BE SEVERED BY TRENCHER, VIBRATORY PLOW OR APPROVED EQUIVALENT. ROOTS OVER 1.0" DIAMTER SHALL BE CLEANLY CUT BY HAND. ROOT PRUNING ADJACENT TO SPECIMEN TREES MAY REQUIRE SOIL REMOVAL BY SUPERSONIC AIR TOOL TO MINIMIZE TREE AND ROOT IMPACTS.

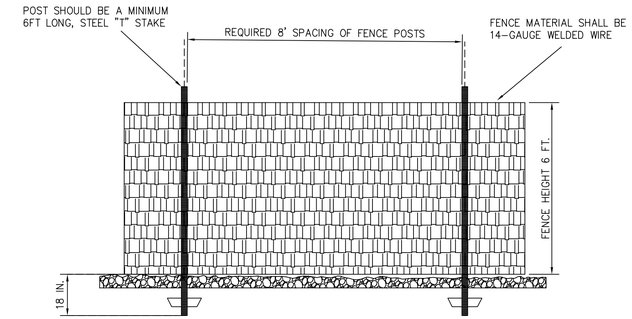

NOTE: TREE PROTECTION FENCING SHOULD BE MAINTAINED THROUGHOUT CONSTRUCTION

TREE PROTECTION FENCE INSTALLATION DETAIL
NOT TO SCALE

TYPICAL SIGNAGE FOR TREE PRESERVATION AREA
REFERENCE DETAIL II.A.5

ATTACHMENT TO TREES OR VEGETATION IS PROHIBITED

SIGNS TO BE PROPERLY MAINTAINED THROUGHOUT CONSTRUCTION

SIGN POSTS MAY BE WOOD OR METAL BUT MUST MAKE THE SIGN VISIBLE FROM A STANDING POSITION

SIGNS MUST BE PLACED SUCH THAT A SIGN CAN BE SEEN BY ALL PARTICIPANTS IN THE LAND DISTURBING ACTIVITY AT ALL TIMES, A MINIMUM OF EVERY 50'.

SIGNS MUST BE LAMINATED OR A DURABLE, WEATHERPROOF MATERIAL

TREE PRESERVATION TECHNIQUES
(Both techniques described below can be combined with the pruning of roots that may occur beyond the area of treatment).

#1 – For Use in Areas Where Equipment Must Operate in Areas That Will Remain at Existing Grade:

- In the woodchip and plywood or chainlink fence area shown in figure 1 below, spread 10-15" of wood chips by hand.
- On top of the wood chips, lay 5/8 to ¾ inch plywood or heavy-gauge chain link fence to provide a path for equipment and workers to operate.

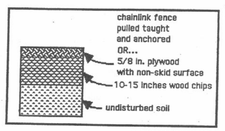

Figure 1

#2 – For Use in Areas Where Fill Soil Will Be Placed Over the Root Zone:

- An aeration system shall be installed in the area shown in figure 2 below prior to grading. The aeration system (see diagram below) shall consist of *geotextile* fabric laid on top of the undisturbed ground; with not less than six inches of river rock on top of it; and with a second layer of *geotextile* fabric laid on top of the rock.
- Fill dirt can then be placed on top of the *geotextile* fabric.

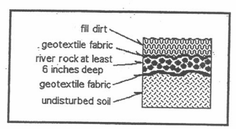

Figure 2

WALTER L. PHILLIPS INCORPORATED
ESTABLISHED 1945
Engineers • Surveyors • Planners
Landscape Architects • Arborists
207 PARK AVENUE
FALLS CHURCH, VIRGINIA 22046
(703) 532-6163 Fax (703) 533-1301
www.WLPINC.com

DRAWN: BS, AOA
CHECKED: KW
SCALE: NONE
DATE: 8/25/14

COMMONWEALTH OF VIRGINIA
KAREN L.S. WHITE
Lic. No.041850
8/25/14
PROFESSIONAL ENGINEER

REVISION APPROVED BY					
NO.	DESCRIPTION	DATE	REV. BY	APPROVED	DATE

TREE PRESERVATION NOTES AND DETAILS

THE KENSINGTON OF FALLS CHURCH
700 WEST BROAD STREET
CITY OF FALLS CHURCH, VIRGINIA

SHEET: C-1202

PLANT SCHEDULE

TREES

KEY	BOTANICAL NAME / COMMON NAME	SIZE	QUANTITY	COMMENTS
AR	ACER RUBRUM 'ARMSTRONG' ARMSTRONG RED MAPLE	2"-2.5" CAL. B&B	6	SEE TREE PLANTING DETAIL STRONG CENTRAL LEADER
BNH	BETULA NIGRA'HERITAGE' RIVER BIRCH	2"-2.5" CAL. B&B	3	SEE TREE PLANTING DETAIL MULTI STEM, 3 STEMS MAX
NS	NYSSA SYLVATICA BLACK GUM	2"-2.5" CAL. B&B	4	SEE TREE PLANTING DETAIL STRONG CENTRAL LEADER
PA	PLATANUS x ACERFOLIA LONDON PLANE TREE	2"-2.5" CAL. B&B	5	SEE TREE PLANTING DETAIL STRONG CENTRAL LEADER

SHUBS

KEY	BOTANICAL NAME / COMMON NAME	SIZE	QUANTITY	COMMENTS
CSC	CORNUS SERCICEA 'CARDINAL' REDOSIER DOGWOOD	24" SPREAD CONT.	9	SEE SHRUB PLANTING DETAIL
HYQ	HYDRANGEA QUERCIFOLIA OAKLEAF HYDRANGEA	24" SPREAD CONT.	16	SEE SHRUB PLANTING DETAIL
IGS	ILEX GLABRA 'SHAMROCK' INKBERRY	24" SPREAD CONT.	15	SEE SHRUB PLANTING DETAIL
IVS	ITEA VIRGINICA 'SPRICH LITTLE HENRY' VIRGINIA SWEETSPIRE	24" SPREAD CONT.	12	SEE SHRUB PLANTING DETAIL
PLO	PRUNUS LAUROCERASUS 'OTTO LUYKEN' OTTO LUYKEN LAUREL	24" SPREAD CONT.	19	SEE SHRUB PLANTING DETAIL
VDE	VIBURNUM DENTATUM ARROWOOD VIBURNUM	24" SPREAD B&B	9	SEE SHRUB PLANTING DETAIL

PERENNIALS, GRASSES, GROUNDCOVERS

KEY	BOTANICAL NAME / COMMON NAME	SIZE	QUANTITY	COMMENTS
CKF	CALAMAGROSTIS x ACUTIFLORA 'KARL FOERSTER' FEATHER REED GRASS	1 GAL. CONT.	90	SEE PERENNIAL PLANTING DETAIL - 24" SPACING
EPU	ECHINACEA PURPUREA PURPLE CONEFLOWER	1 GAL. CONT.	86	SEE PERENNIAL PLANTING DETAIL - 18" SPACING
LMB	LIRIOPE MUCARI 'BIG BLUE' BIG BLUE LIRIOPE	4" POTS	777	SEE PERENNIAL PLANTING DETAIL - 12" SPACING
NAR	NARCISSUS 'MARKEE' 'MARIKEE DAFFODIL	BULBS	107	SEE PERENNIAL PLANTING DETAIL - 18" SPACING
NWL	NEPTA X FAASSENII 'WALKER'S LOW' DWARF CATMINT	1 GAL. CONT.	59	SEE PERENNIAL PLANTING DETAIL - 24" SPACING

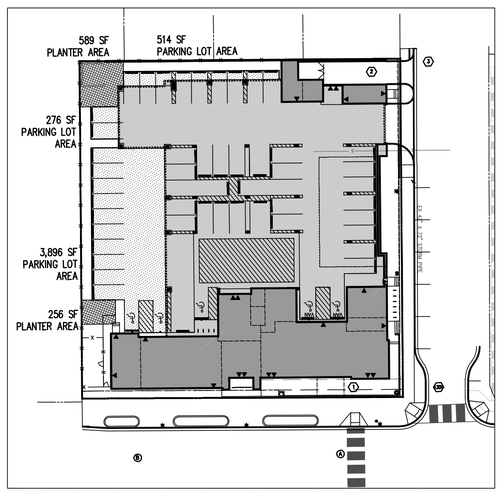

INTERIOR PARKING LOT LANDSCAPE CALCULATION

SCALE 1"=40'

PARKING LOT AREA	4,686 SF
INTERIOR LANDSCAPING REQUIRED	234 SF (5%)
INTERIOR LANDSCAPING PROVIDED	845 SF (18%)

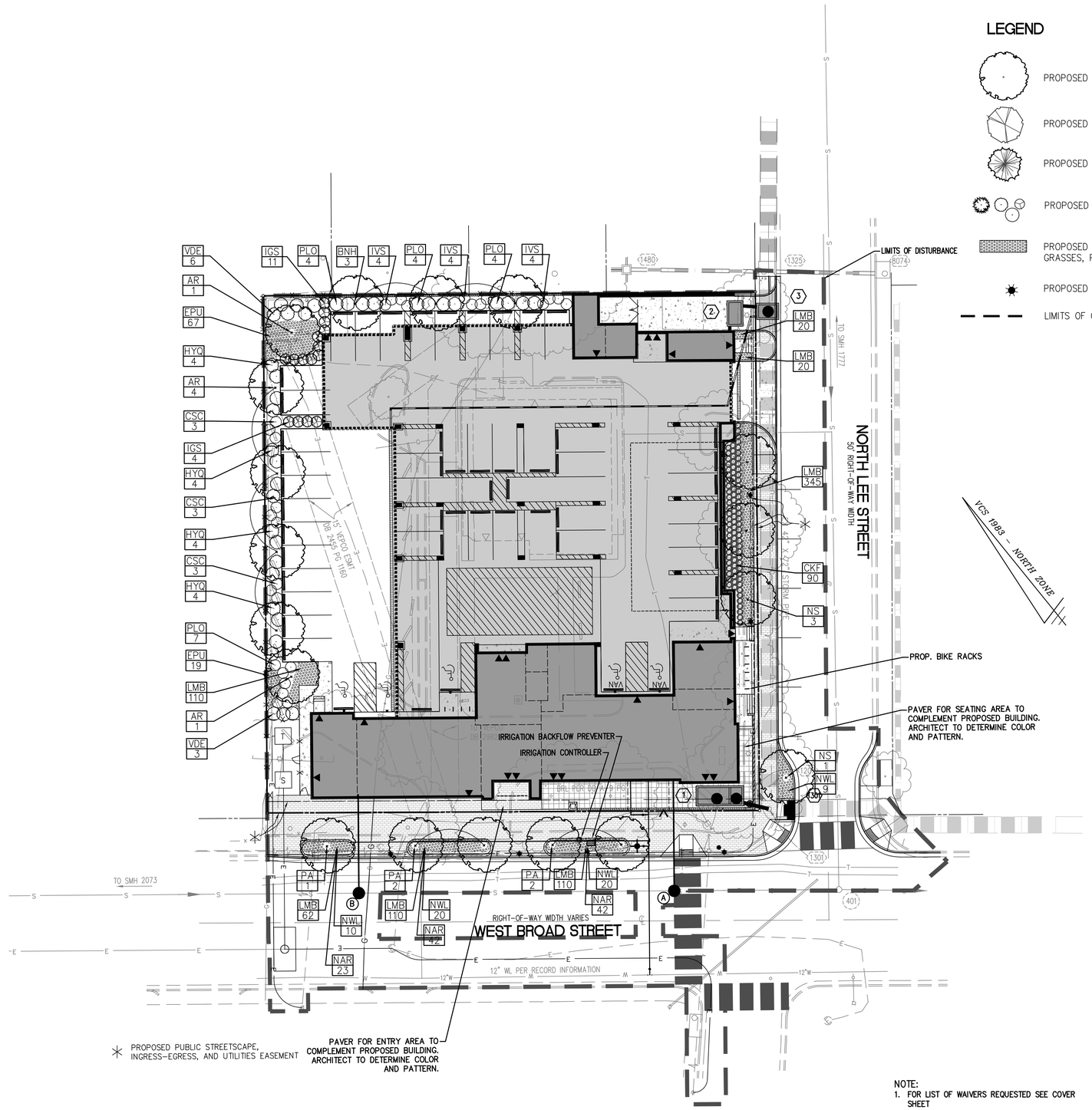

LEGEND

- PROPOSED DECIDUOUS TREES
- PROPOSED ORNAMENTAL TREE
- PROPOSED EVERGREEN TREE
- PROPOSED SHRUBS
- PROPOSED GROUNDCOVER, GRASSES, PERENNIALS
- PROPOSED STREETLIGHT
- LIMITS OF CLEARING AND GRADING

20 0 10 20 40 80

(IN FEET)
1 INCH = 20'

NOTE:

1. FOR LIST OF WAIVERS REQUESTED SEE COVER SHEET
2. LIRIOPE SHALL NOT BE PLANTED WITHIN A 3' RADIUS OF THE LONDON PLANE TREES IN THE PLANTERS. BULBS TO BE USED TO UNDERPLANT THE PERENNIAL PLANTS.
3. IRRIGATION TO BE PROVIDED IN STREETSCAPE PLANTERS.

WALTER L. PHILLIPS INCORPORATED
ESTABLISHED 1945
Engineers • Surveyors • Planners
Landscape Architects • Arborists
207 PARK AVENUE
FALLS CHURCH, VIRGINIA 22046
(703) 532-6163 Fax (703) 533-1301
www.WLPINC.com

DRAWN: BS, AOA
CHECKED: KW
SCALE: 1"=20'
DATE: 8/25/14

COMMONWEALTH OF VIRGINIA
KAREN L. S. WHITE
Lic. No.041850
8/25/14
PROFESSIONAL ENGINEER

REVISION APPROVED BY

NO.	DESCRIPTION	DATE	REV. BY	APPROVED	DATE

LANDSCAPE PLAN
THE KENSINGTON OF FALLS CHURCH
700 WEST BROAD STREET
CITY OF FALLS CHURCH, VIRGINIA

PECIFICATIONS FOR PLANTING
ity of Falls Church, VA – Urban Forestry / Development Services

1. Contractor shall verify existing conditions and utility locations. The City Arborist prior to the planting must approve adjustments to locations of plant material due to field conditions. Any substitutions in plant material and sizes specified will not be accepted, unless approved by the City Arborist prior to installation.

2. All plant material shall conform the American Standard for Nursery, latest edition, published by the **American Nursery and Landscape Association**. All plants must be free from injury, insect infestations and disease. All plant material must be inspected by the City Arborist prior to planting. The Contractor shall phone at least three (3) days prior to installation for inspection of the material and for inspection of the planting operation.

3. All plant material must bear original nursery tags indicating the genus, species and if applicable, cultivars and variety. All tags shall be removed after the City Arborist has inspected the plant material.

4. Test soil drainage before planting. Dig a hole as deep as your planting hole and fill with water. If water drains at a rate les than one inch per hour, install drainage to carry water away from the planting hole base, or moving or raising the planting site (berm construction)

5. Examine soil for compaction before planting. If soils are compacted in an area where a group of plants are to be installed, incorporated several inches of a combination of organic materials such as composted yard waste, finely shredded pine bark mulch (*superfines*) or shredded, composted leaf mulch (*leaf-gro*) and till to a depth of tweleve (12) to eighteen (18) inches over the entire area. Do not till if planting is within a tree preservation area. Apply the organic matter at a rate of one-quarter organic matter to three-quarters existing soil. Do not incorporate small quantities of sand – compaction will increase and drainage decreases. For single tree plantings, backfill planting holes with unamended soil. Increase the width of the top of the planting hole in area where soil has been compacted. Do not incorporate organic matter such as peat moss into backfill for individual planting holes.

6. Tree pits shall be a minimum of two (2) and a half (1/2) times the width of the root ball and no deeper than the height of the root ball. On balled and burlaped trees, remove pinning nails or rope lacing, then cut away the wrapping and then backfill. Remove the top 12" of the wire basket. Remove all rope, whether jute or nylon, from trunks. For container materials, remove the container completely. Select trees grown in containers with vertical ribs or a copper-treatment on the interior wall. These container modification and treatments minimize circling root formation. If roots are circling around the root ball exterior of container plants (trees, shrubs or perennials) cut through the roots and soil in a few places.

   Container tree with multiple circling roots will be rejected. Place shrubs and perennials at the same depth they were in the containers. For bare root perennials plant with the soil even with the top of the crown. Dig the hole wide enough to allow the roots to spread out in the soil. Push the soil back into the hole over the roots and around the top of the plant.

7. A soil test shall be made and the results submitted to the City Arborist prior to the installation of the plant material.

   For trees: A slow-release granular fertilizer shall be incorporated into the top four (4) inches of backfill soil to provide nitrogen, or if a soil test indicated a need for phosphorus or potassium. Use no more that 1 lb. Actual nitrogen per 1,000 ft. of planting hole surface. (Example – if using 18-6-12 with a 5' diameter hole, incorporate 0.3 oz. per planting hole.)

   For shrubs: A slow-release granular fertilizer shall be incorporated into the top four (4) inches of backfill soil to provide nitrogen, or if a soil test indicates a need for phosphorus or potassium. Use quantities in accordance with manufacturer's direction.

   For perennials, bulbs and annuals: A slow –release high phosphate fertilizer such as 7:40:6 or approved equal shall be incorporated into the top four (4) inches of the backfill mix. Alternatively, use Plant-tone on approved equal for sun perennials, together with rock phosphate at rates in accordance with manufacturers directions. Alternatively, for shade perennials use Hollytone or approved equal, together with super phosphate at a rate in accordance with manufacturers directions. Use gypsum, a soil conditioner, for clay soils. For bulbs commercial raw finely ground Bone Meal with an analysis of 4% nitrogen and %20 phosphorus acid shall be incorporated into the backfill mix.

8. When half of the backfill has been returned to the planting hole, water shall be applied to provide settlement and eliminate air pockets. The tree shall be thoroughly watered again after the remaining soil has been placed in the planting pit. A three (3) to four (4) inch dam of soil shall be constructed around the planting pit.

9. Two (2) to three (3) inches of mulch shall be placed over the tree-planting pit, but shall be kept three (3) to four (4) inches away from the trunk of the tree or crowns of shrubs. Do not allow mulch to touch the trunks of trees or crowns of shrubs. Use mulch that is compatible with the type of plant used. Avoid mulch that has not been nitrogen composted, as the pH of the soil could change as the mulch degrades. Pine bark mulch will not change the pH of the soil as it degrades. This is the best type of mulch for use with perennials. In mulching perennials, use no more than 1-2". For Mediterranean type of perennials, such as lavender, or for peonies or iris, use no mulch at all.

10. Trees shall be planted at the height of the surrounding grade with root flares visible. Should soil have been piled over the root flare during the digging process, this soil shall be removed so that the flare is slightly above grade.

11. Any pruning must be done with the approval of the City Arborist. Pruning at the time of planting shall be done only to remove broken branches or double (co dominant) leaders.

12. Remove tags and labels from trees and shrubs to prevent girdling branches and trunks.

13. Stakes shall be used only in area of high traffic or highly windy locations. A tree-staking diagram should be provided if staking is necessary. Stake for maximum of one year. Allow trees a slight amount of flex rather than holding them rigidly in place. Use guying or attaching that won't damage the bark. To prevent trunk girdling, remove all guying material after one year.

14. Use tree wrap only on thin barked trees planted in spring or summer into hot or paved areas. In these instances use white wrap, attaching with out the use of wire, rope, ties or tape, and remove after one year.

15. Planting Season – Planting shall be done only within the following dates:

    a. Deciduous Trees – March 15 to May 30 or September 15 to December 15 (oaks and black gum to be spring dug and planted only).
    b. Evergreen Trees – March 1 to May 15 or September 15 to November 15.

16. All plant material shall be guaranteed by the Contractor for one year from the date of acceptance to be in good, healthy and flourishing condition. In the event that a plant dies or in the judgment of the City Arborist, fails to flourish; the Contractor shall replace in accordance with the above noted specifications.

17. The Contractor shall be responsible for the maintenance of the plants during this one-year warranty period. This maintenance shall include providing water on a weekly basis when natural rainfall is less than one inch a week. Drip irrigation systems and water reservoir devices can facilitate watering. Root balls of trees should be slowly and thoroughly soaked at time of watering. For planting beds (i.e., trees, shrubs and perennials), water slowly and deeply putting down 1"-2" of water in a 6-12 hour period. This should give a penetration of 12-18" depth.

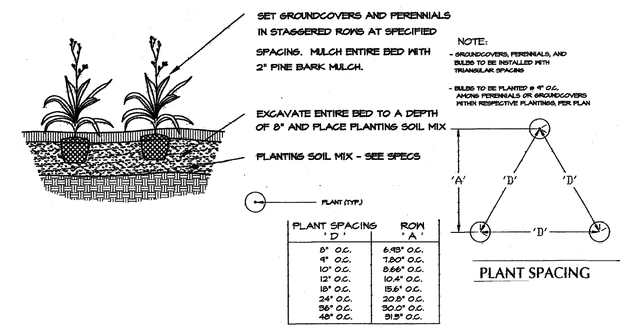

PLANT SPACING 'D'	ROW 'A'
6" O.C.	6.93" O.C.
9" O.C.	7.80" O.C.
10" O.C.	8.66" O.C.
12" O.C.	10.4" O.C.
18" O.C.	15.6" O.C.
24" O.C.	20.8" O.C.
36" O.C.	30.0" O.C.
48" O.C.	31.5" O.C.

CITY OF FALLS CHURCH PERENNIAL/GROUNDCOVER PLANTING DETAIL
SECTION
SCALE:NTS

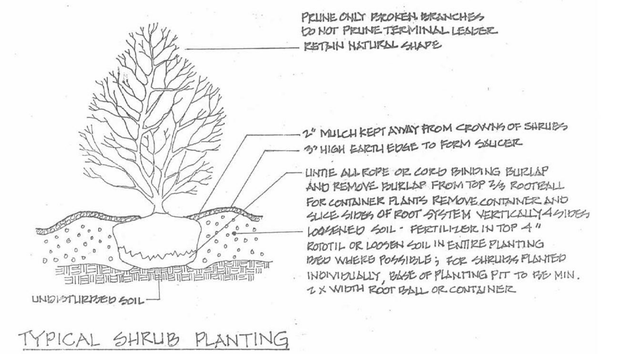

CITY OF FALLS CHURCH SHRUB PLANTING DETAIL
SECTION
SCALE:NTS

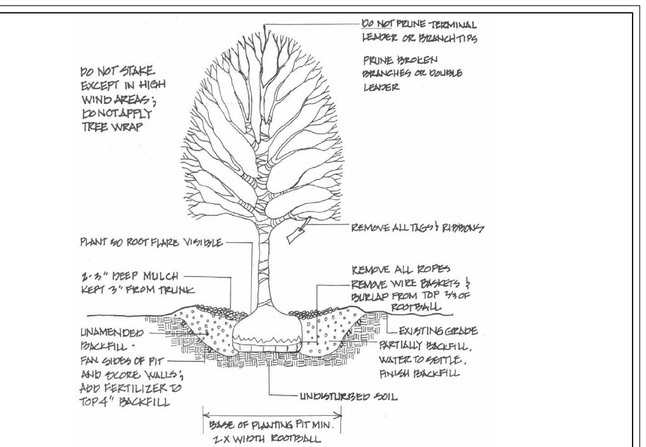

CITY OF FALLS CHURCH TREE PLANTING DETAIL
SECTION
SCALE:NTS

WALTER L. PHILLIPS INCORPORATED
ESTABLISHED 1945
Engineers • Surveyors • Planners
Landscape Architects • Arborists
207 PARK AVENUE
FALLS CHURCH, VIRGINIA 22046
(703) 532-6163 Fax (703) 533-1301
www.WLPINC.com

DRAWN: BS, AOA
CHECKED: KW
SCALE: NONE
DATE: 8/25/14

COMMONWEALTH OF VIRGINIA
KAREN L. S. WHITE
Lic. No.041850
8/25/14
PROFESSIONAL ENGINEER

REVISION APPROVED BY					
NO.	DESCRIPTION	DATE	REV. BY	APPROVED	DATE

PLANTING NOTES AND DETAILS

THE KENSINGTON OF FALLS CHURCH

700 WEST BROAD STREET
CITY OF FALLS CHURCH, VIRGINIA

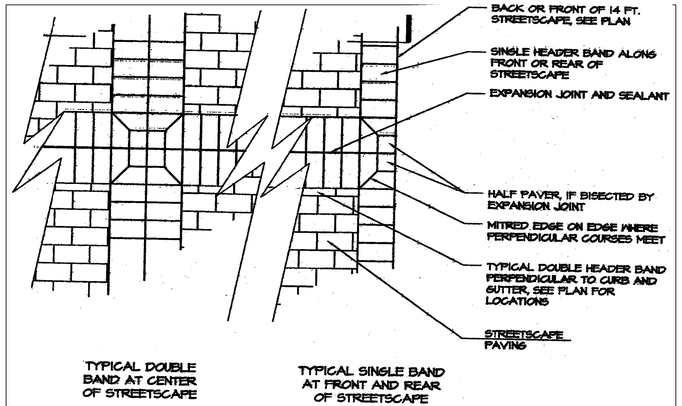

SPECIAL PAVING HEADER BAND INTERSECTION

PLAN NTS

KEY	TYPE	MANUFACTURER	SIZE	PRODUCT NAME	COLOR
PAVERS					
A	BRICK PAVER	E.P. HENRY	4" x 8" x 2.25"	YANKEE HILL	MEDIUM RED VELOUR
B	FACE BRICK	E.P. HENRY	3-5/8" x 7-5/8" x 2-1/4"	YANKEE HILL	MEDIUM RED VELOUR
C	BULLNOSE SHAPED BRICK	E.P. HENRY	3-5/8" x 8" x 2-1/4"	YANKEE HILL	MEDIUM RED VELOUR
D	CONCRETE PAVER	HANOVER	4" x 8" x 3-1/8"	PREST BRICK	QUARRY RED, NATURAL FINISH
E	DETECTABLE WARNING PAVER	HANOVER	11-3/4" x 11-3/4" x 2"	DETECTABLE WARNING PAVER	QUARRY RED

STREETSCAPE PAVER SCHEDULE

NOTE: SEE SPECS FOR PAVER DESCRIPTION NTS

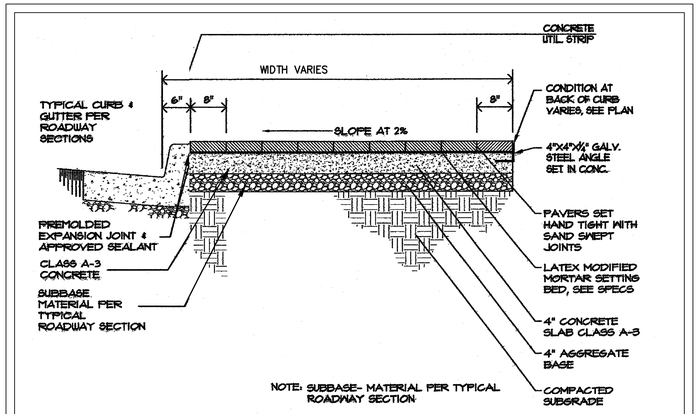

TYPICAL SIDEWALK SECTION

SECTION NTS

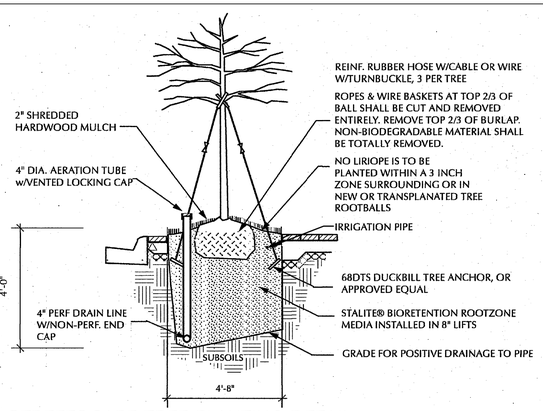

STREETSCAPE TREE PLANTING DETAIL

PLAN NTS

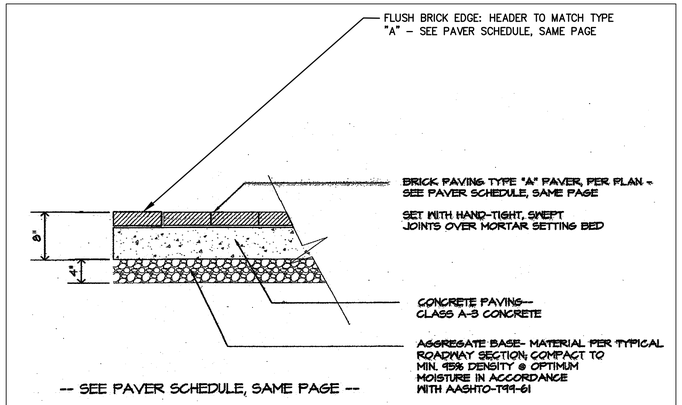

PLANTER EDGE DETAIL

SECTION NTS

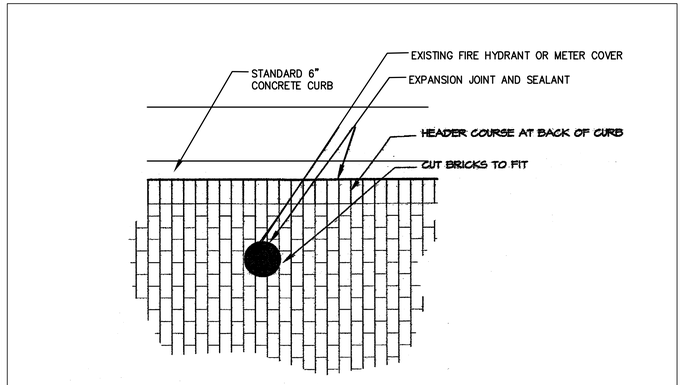

TYPICAL PAVING AT FIRE HYDRANT OR UTILITY

PLAN NTS

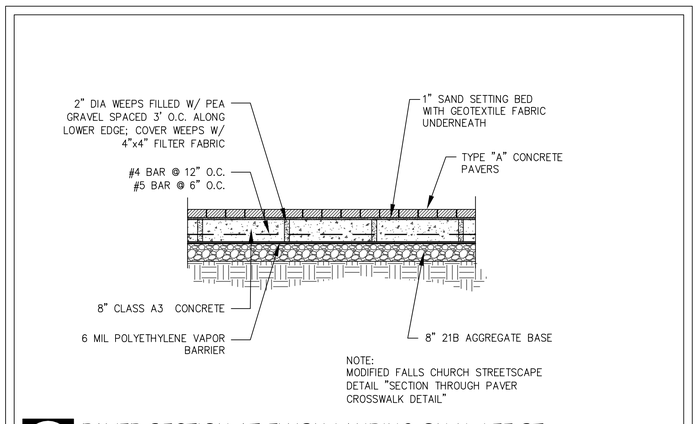

PAVER SECTION AT FLUSH LANDING ON N. LEE ST.

SECTION NTS

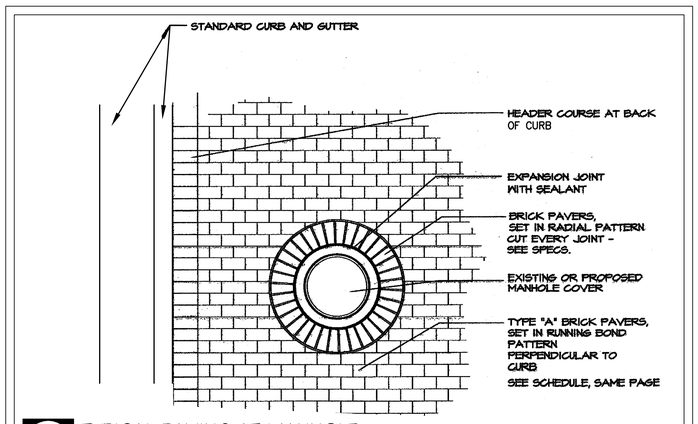

TYPICAL PAVING AT MANHOLE

PLAN NTS

NOTE: DETAILS PROVIDED FROM THE CITY OF FALLS CHURCH WEST BROAD STREET STREETSCAPE IMPROVEMENTS VILLAGE SECTION DATED 7/9/04. CONTRACTOR TO OBTAIN INSTALLATION SPECIFICATIONS FROM THE CITY OF FALLS CHURCH, AND PROVIDE CITY STAFF WITH PRODUCT CUT-SHEETS FOR APPROVAL. MODIFICATIONS HAVE BEEN MADE FOR VARIOUS DIMENSIONS. SEE LAYOUT PLAN FOR DETAILS.

WALTER L. PHILLIPS INCORPORATED
ESTABLISHED 1945
Engineers • Surveyors • Planners
Landscape Architects • Arborists
207 PARK AVENUE
FALLS CHURCH, VIRGINIA 22046
(703) 532-6163 Fax (703) 533-1301
www.WLPINC.com

DRAWN: BS, AOA
CHECKED: KW

COMMONWEALTH OF VIRGINIA
KAREN L. S. WHITE
Lic. No.041850
8/25/14
PROFESSIONAL ENGINEER

SCALE: NONE
DATE: 8/25/14

NO.	DESCRIPTION	DATE	REV. BY	APPROVED

REVISION APPROVED BY

CITY OF FALLS CHURCH STREETSCAPE DETAILS

THE KENSINGTON OF FALLS CHURCH

700 WEST BROAD STREET
CITY OF FALLS CHURCH, VIRGINIA

SHEET: C-1205

PROPOSED 6' SCREEN FENCE DETAIL

DELGARD PREMIER ALUMINUM FENCING

THE STRENGTH OF BEAUTY

COMMERCIAL GRADE FENCE INSTALLATION MANUAL

GIVE THIS MANUAL TO THE HOMEOWNER UPON COMPLETION

DT3332-20

CAUTION: This manual is for **commercial** fence only. All fence and gates **must** be installed to conform with B.O.C.A. Specifications and/or local building code regulations.

Note: Local municipalities may require a setback from property line to fence line, otherwise, it is recommended to be 2" inside the property line. It is important to find out all the requirements before installing your fence.

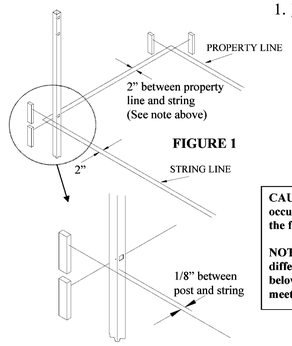

FIGURE 1

1. Layout and Planning

1.1. First stake out the area and run strings around as shown in Figure 1.

1.2. Start by installing the gate posts. See your gate installation manual for proper gate post spacing.

1.3. Proceed to dig post holes. Post center to center measurement will be 5' 11 1/8" when everything is level and tight. See Figure 2 (on next page) for post hole depth.

CAUTION: In areas where ground frost occurs extend the concrete footing below the frost line.

NOTE: Local municipalities may require different hole depths than those shown below. You must verify that these depths meet all local building codes.

1

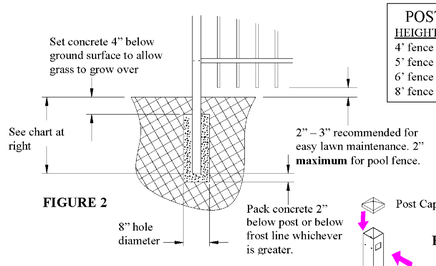

FIGURE 2

POST DEPTH	
HEIGHT	DEPTH
4' fence	≅ 16"
5' fence	≅ 25"
6' fence	≅ 31"
8' fence	≅ 43"

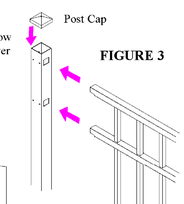

FIGURE 3

2. Installation

2.1. Use a rubber mallet to drive the post caps onto the posts. Be careful not to damage the post or caps. See Figure 3.

2.2. Working out from where the gates are installed slide a section of fence into the gate post holes and into the next post. See Figure 3. Fence sections must be inserted entirely into the post to meet code.

2.3. Fill the post hole with a stiff concrete mix being sure that the concrete extends below the bottom of the post.

2.4. Plumb the posts and pickets while the concrete is setting. The fence section can rake allowing the rails to follow the contour of the ground. Brace the posts as necessary while the concrete is setting.

2.5. Fence rails will need to be mitered for corner posts. See Figure 4. Fence sections may be cut to length as necessary. Cut fence sections will need to be notched as shown in Figure 5.

2.6. Additional hardware is available to attach posts and rails to walls.

2.7. After concrete has set fasten the posts to the fence with #8 x 1" self-drilling self-tapping screws provided. Be careful not to over-tighten because screw heads may break off or the threads may strip out.

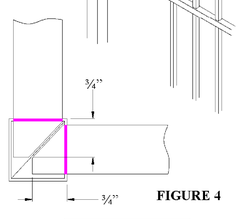

FIGURE 4

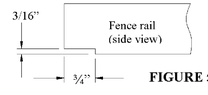

FIGURE 5

DELGARD FENCE COMPANY
8600 RIVER ROAD
DELAIR, NJ 08110-3398 USA

2

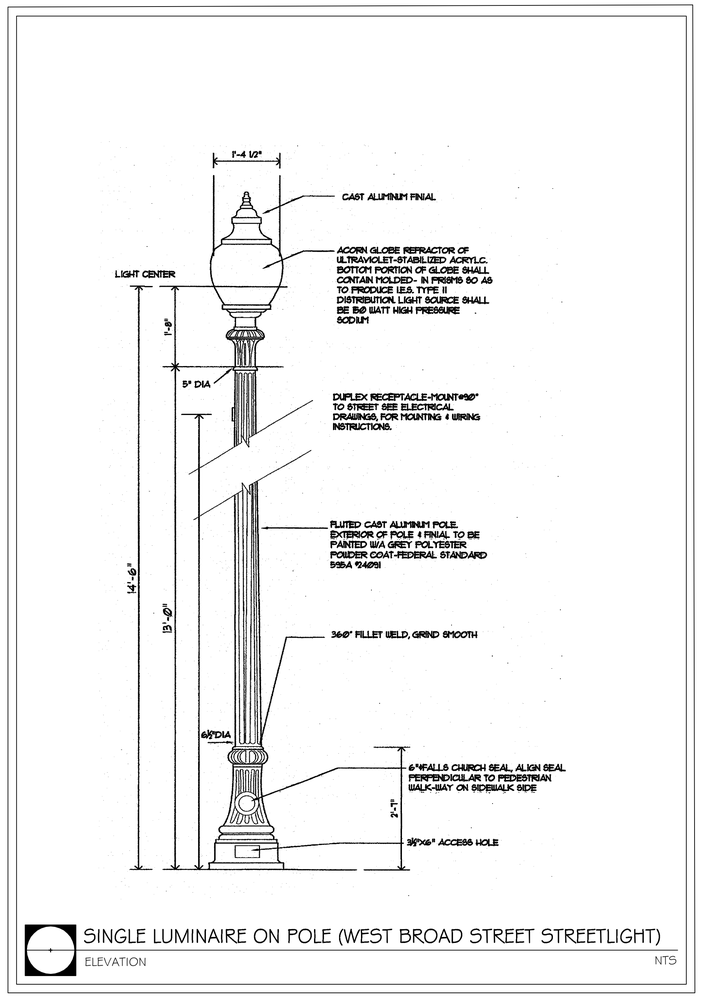

SINGLE LUMINAIRE ON POLE (WEST BROAD STREET STREETLIGHT)

ELEVATION NTS

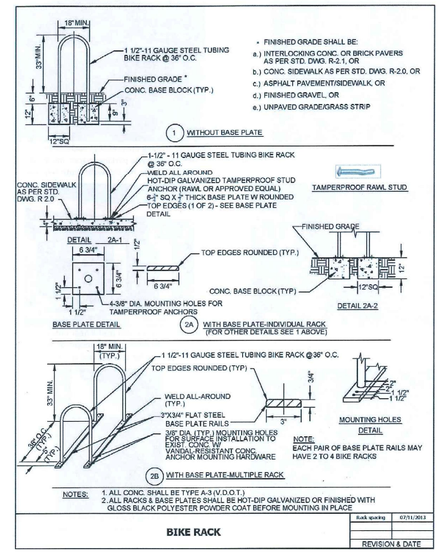

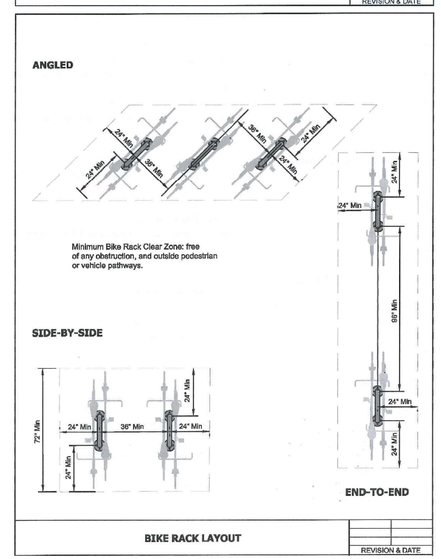

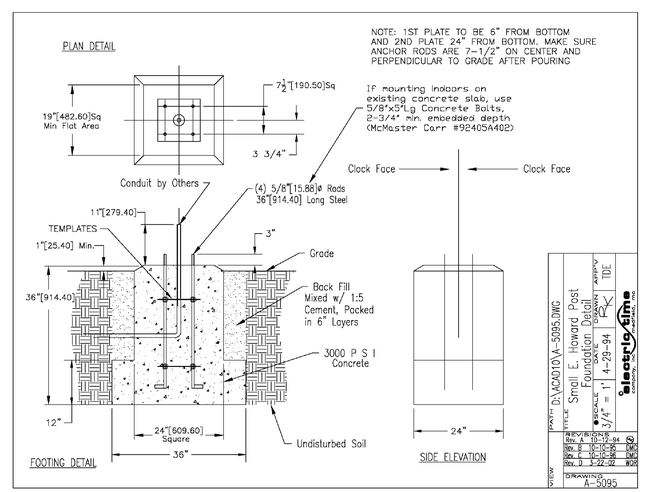

DETAIL OF BASE FOR POLE MOUNTED CLOCK

WALTER L. PHILLIPS INCORPORATED
ESTABLISHED 1945
Engineers • Surveyors • Planners
Landscape Architects • Arborists
207 PARK AVENUE
FALLS CHURCH, VIRGINIA 22046
(703) 532-6163 Fax (703) 533-1301
www.WLPINC.com

DRAWN: BS, AOA
CHECKED: KW
SCALE: NONE
DATE: 8/26/14

COMMONWEALTH OF VIRGINIA
KAREN L. S. WHITE
Lic. No.041850
8/25/14
PROFESSIONAL ENGINEER

REVISION APPROVED BY

NO.	DESCRIPTION	DATE	REV. BY	APPROVED	DATE

SITE FIXTURES DETAILS

THE KENSINGTON OF FALLS CHURCH

700 WEST BROAD STREET
CITY OF FALLS CHURCH, VIRGINIA

SHEET: C-1206

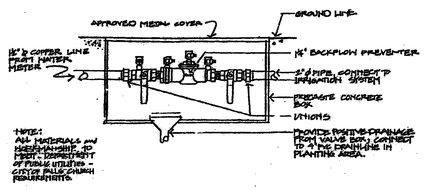

REDUCED PRESSURE BACKFLOW PREVENTER

SECTION NTS

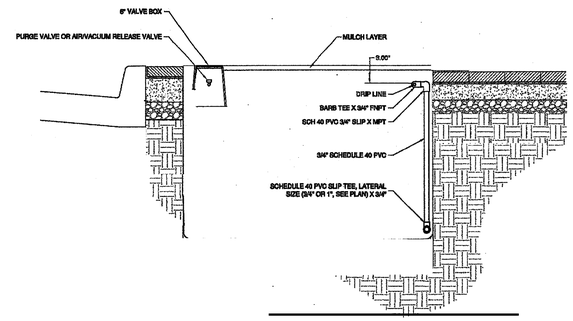

TYPICAL_PLANTER_IRRIGATION

SECTION/ELEVATION NTS

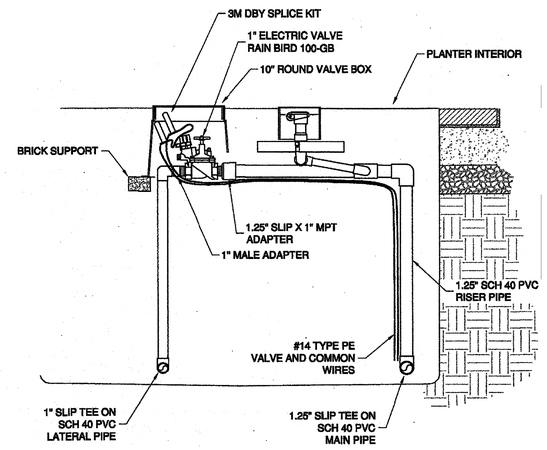

THIS DETAIL APPLIES TO ALL ZONE VALVE INSTALLATIONS. VALVES ARE TO BE PLACED CLOSE TO INTERIOR WALL OF PLANTER SO AS TO MINIMIZE DISTURBANCE TO THE PLANTED MATERIALS.

VALVES_IN_PLANTER

SECTION/ELEVATION NTS

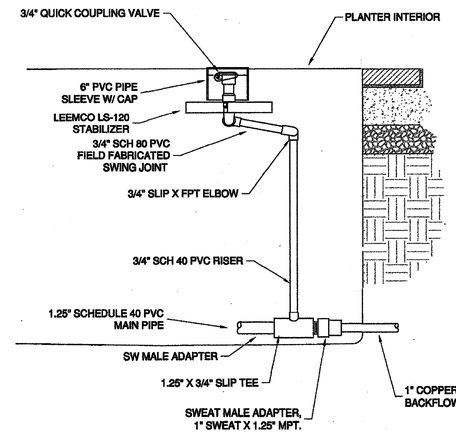

THIS DETAIL APPLIES ONLY TO THE QUICK COUPLING VALVE ADJACENT TO THE BACKFLOW PREVENTER. VALVES ARE TO BE PLACED CLOSE TO THE INTERIOR WALL OF THE PLANTER SO AS TO MINIMIZE DISTURBANCE TO THE PLANT MATERIALS.

FIRST_QUICK_COUPLING_VALVE

SECTION/ELEVATION NTS

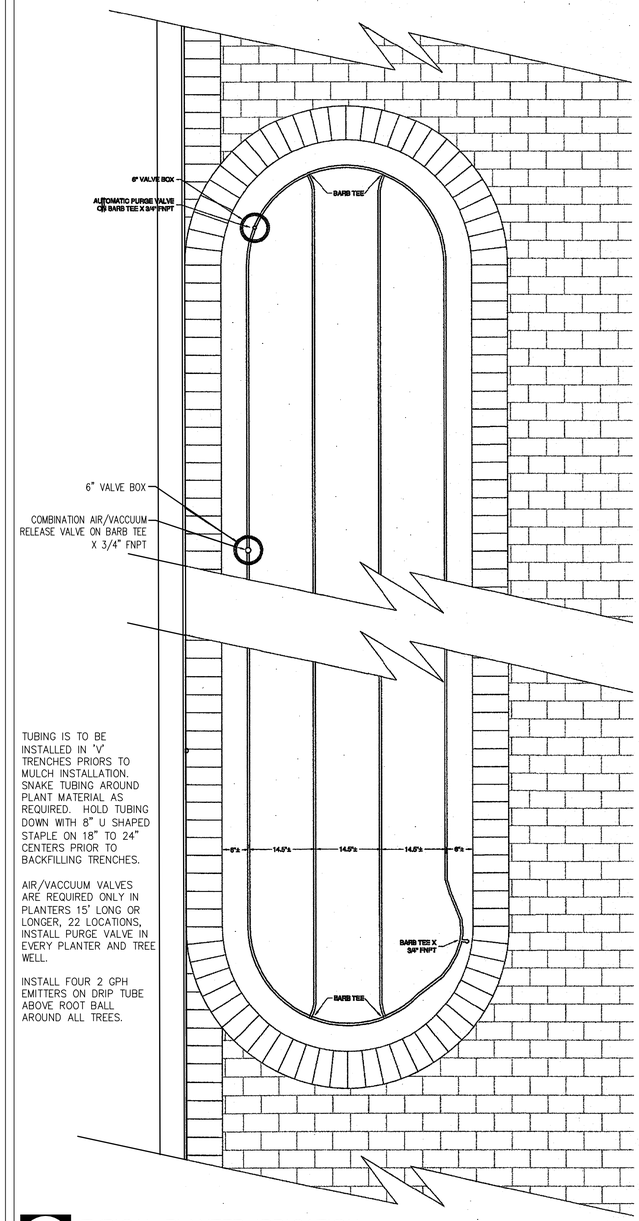

TUBING IS TO BE INSTALLED IN 'V' TRENCHES PRIORS TO MULCH INSTALLATION. SNAKE TUBING AROUND PLANT MATERIAL AS REQUIRED. HOLD TUBING DOWN WITH 8" U SHAPED STAPLE ON 18" TO 24" CENTERS PRIOR TO BACKFILLING TRENCHES.

AIR/VACCUUM VALVES ARE REQUIRED ONLY IN PLANTERS 15' LONG OR LONGER, 22 LOCATIONS, INSTALL PURGE VALVE IN EVERY PLANTER AND TREE WELL.

INSTALL FOUR 2 GPH EMITTERS ON DRIP TUBE ABOVE ROOT BALL AROUND ALL TREES.

TYPICAL_PLANTER_IRRIGATION

SECTION/ELEVATION NTS

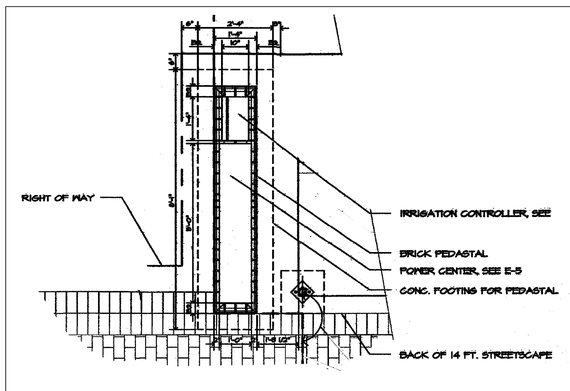

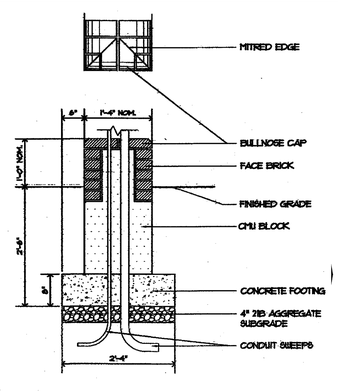

BRICK_PEDISTAL_FOR_IRRIGATION_CONTROLLER_AND_POWER_CENTER

SECTION/ELEVATION NTS

NOTES:

1. ALL COMPONENTS OF THE IRRIGATION ARE TO BE LOCATED IN THE CITY RIGHT-OF-WAY; THIS INCLUDES MAIN HOOK UP VALVES, WATER METER AND POWER SOURCES. THE STREETSCAPE IRRIGATION SHALL BE SEPARATE FROM THE ON SITE WATER LING AND METER.

2. THE CITY SHALL BE RESPONSIBLE FOR THE STREETSCAPE IRRIGATION SYSTEM ONCE SHOWN TO BE OPERATIONAL UPON A SUCCESSFUL INSPECTION BY A DESIGNATED CITY EMPLOYEE AFTER THE APPROPRIATE BOND RELEASES.

NOTE: DETAILS PROVIDED FROM THE CITY OF FALLS CHURCH WEST BROAD STREET STREETSCAPE IMPROVEMENTS VILLAGE SECTION DATED 7/9/04. CONTRACTOR TO OBTAIN INSTALLATION SPECIFICATIONS FROM THE CITY OF FALLS CHURCH, AND PROVIDE CITY STAFF WITH PRODUCT CUT-SHEETS FOR APPROVAL. MODIFICATIONS HAVE BEEN MADE FOR VARIOUS DIMENSIONS. SEE LAYOUT PLAN FOR DETAILS.

WALTER L. PHILLIPS INCORPORATED
ESTABLISHED 1945
Engineers • Surveyors • Planners
Landscape Architects • Arborists
207 PARK AVENUE
FALLS CHURCH, VIRGINIA 22046
(703) 532-6163 Fax (703) 533-1301
www.WLPINC.com

DRAWN: DC/KJW CHECKED: LMC

COMMONWEALTH OF VIRGINIA KAREN L. S. WHITE Lic. No.041850 8/25/14 PROFESSIONAL ENGINEER

SCALE: NONE DATE: 8/25/14

REVISION APPROVED BY				
NO.	DESCRIPTION	DATE	REV. BY	APPROVED

STREETSCAPE PLANTER IRRIGATION DETAILS

THE KENSINGTON OF FALLS CHURCH

700 WEST BROAD STREET
CITY OF FALLS CHURCH, VIRGINIA

SHEET: C-1207

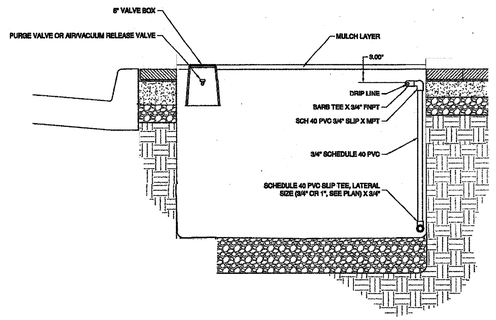

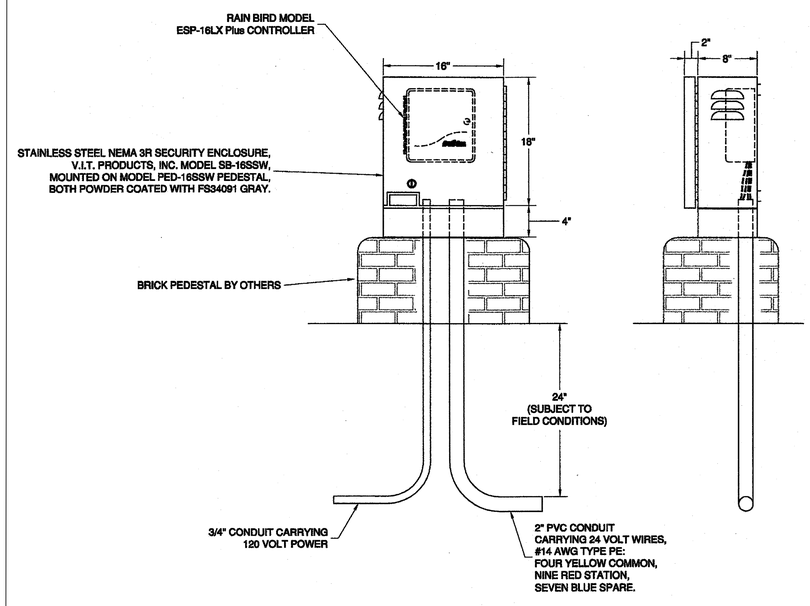

IRRIGATION_CONTROLLER_INSTALLATION_DETAIL

SECTION — NTS

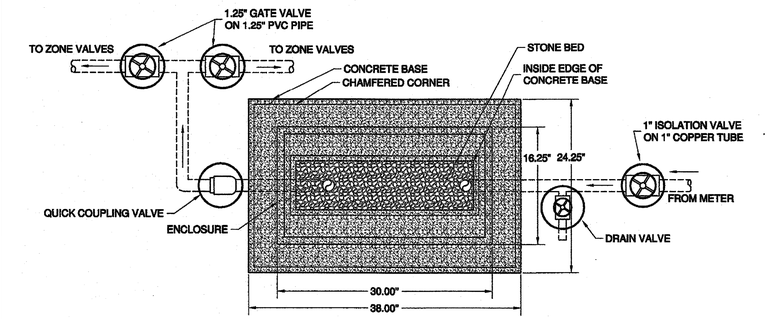

PLAN VIEW

NOTE: THIS ENTIRE ASSEMBLY OF VALVES AND BACKFLOW PREVENTER IS TO BE CONTAINED WITHIN THE PLANTER SHOWN ON THE PLANS. EXACT PLACEMENT OF COMPONENTS IS SUBJECT TO SITE CONDITIONS.

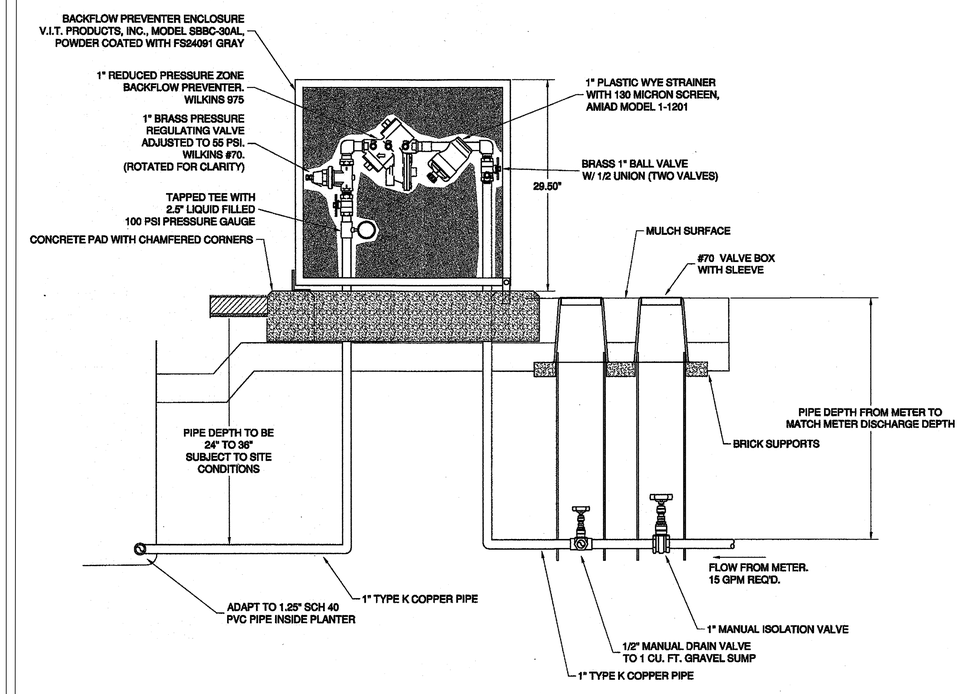

BACKFLOW_PREVENTER_INSTALLATION_DETAIL

SECTION — NTS

1. ALL COMPONENTS OF THE IRRIGATION ARE TO BE LOCATED IN THE CITY RIGHT-OF-WAY; THIS INCLUDES MAIN HOOK UP VALVES, WATER METER AND POWER SOURCES. THE STREETSCAPE IRRIGATION SHALL BE SEPARATE FROM THE ON SITE WATER LING AND METER.
2. THE CITY SHALL BE RESPONSIBLE FOR THE STREETSCAPE IRRIGATION SYSTEM ONCE SHOWN TO BE OPERATIONAL UPON A SUCCESSFUL INSPECTION BY A DESIGNATED CITY EMPLOYEE AFTER THE APPROPRIATE BOND RELEASES.
3. CITY OF FALLS CHURCH MUST BE PRESENT AT THE PRESSURE TEST FOR THE STREETSCAPE IRRIGATION, AND ALSO OBSERVE AND APPROVE THE WORKING IRRIGATION SYSTEM BEFORE CONSIDERING THE STREETSCAPE COMPLETED.
4. PER VOLUNTARY CONCESSIONS, THE OWNER IS TO MAINTAIN THE STREETSCAPE IMPROVEMENTS ALONG THE WEST BROAD STREET AND NORTH LEE STREET FRONTAGES OF THE SUBJECT PROPERTY.

NOTE: DETAILS PROVIDED FROM THE CITY OF FALLS CHURCH WEST BROAD STREET STREETSCAPE IMPROVEMENTS VILLAGE SECTION DATED 7/9/04. CONTRACTOR TO OBTAIN INSTALLATION SPECIFICATIONS FROM THE CITY OF FALLS CHURCH, AND PROVIDE CITY STAFF WITH PRODUCT CUT-SHEETS FOR APPROVAL. MODIFICATIONS HAVE BEEN MADE FOR VARIOUS DIMENSIONS. SEE LAYOUT PLAN FOR DETAILS.

WALTER L. PHILLIPS INCORPORATED
ESTABLISHED 1945
Engineers • Surveyors • Planners
Landscape Architects • Arborists
207 PARK AVENUE
FALLS CHURCH, VIRGINIA 22046
(703) 532-6163 Fax (703) 533-1301
www.WLPINC.com

DRAWN: BS, AOA
CHECKED: KW
SCALE: NONE
DATE: 8/25/14

COMMONWEALTH OF VIRGINIA
KAREN L. S. WHITE
Lic. No.041850
8/25/14
PROFESSIONAL ENGINEER

REVISION APPROVED BY

NO.	DESCRIPTION	DATE	REV. BY	APPROVED	DATE

STREETSCAPE PLANTER IRRIGATION DETAILS

THE KENSINGTON OF FALLS CHURCH

700 WEST BROAD STREET
CITY OF FALLS CHURCH, VIRGINIA

SHEET: C-1208

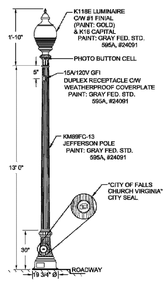

LUMINAIRE SPECIFICATIONS

CATALOGUE NO.:	K118E-BAAR-III/V-60 OR 100(SSL) -5000 OR 8000-120:277V-K16-SST
QUANTITY:	1
GLOBE MOUNTING:	ROTOLOCK
OPTICAL SYSTEM:	BAFFLED ARRAY ACRYLIC RIPPLED
IES CLASS.:	TYPE III/V
INPUT WATTAGE:	60W OR 100W SOLID STATE LIGHTING
SERIES:	5000 OR 8000
CCT:	4500K
LINE VOLTAGE:	120:277V
POLE ADAPTOR:	K16
PAINT:	TEXTURED BLACK
OPTIONS:	SOLID SPUN TOP

BALLAST SPECIFICATIONS

	SUPPLIED
BALLAST TYPE:	ELECTRONIC
BALLAST MANU.:	-
CATALOGUE NO.:	-

OPTIONS

QUICK DISCONNECT:	☒
TERMINAL BLOCK	☐

OTHER: 540 JOULE @ 2mS 20kA-8/20uS SURGE PROTECTION

POLE SPECIFICATIONS

CATALOGUE NO.:	KM99FC-13-DR & AB
QUANTITY:	1
MATERIAL:	FLTD. CAST ALUM. SHAFT CAST ALUM. BASE
PAINT:	GRAY FED. STD. 595A, #24051
SHAFT TOP DIA.:	5"
OVERALL LENGTH:	13' 0"
ANCHOR BOLTS:	(4) 1" x 36"L
BOLT CIRCLE:	12" Ø

NOTES:
1. LIGHT SPECIFICATIONS AND LOCATIONS TO BE REVIEWED AND FINALIZED BY A QUALIFIED LIGHTING ENGINEER.
2. ALL STRUCTURAL CROSS SECTIONS, INCLUDING FOOTINGS, SHALL BE REVIEWED BY A QUALIFIED STRUCTURAL ENGINEER AND MODIFIED AS NECESSARY BASED ON THE SITE SPECIFIC GEOTECHNICAL REPORT.

MANUFACTURED BY:
KING LUMINAIRE COMPANY INC.
P.O. BOX 266
1153 STATE ROUTE 46N
JEFFERSON, OH 44047
WWW.STRESSCRETE.COM

STREETLIGHT TYPE S

NO SCALE

STATISTICS

Description	Symbol	Avg	Max	Min	Max/Min	Avg/Min
7 FT BEYOND PROPERTY LINE (NORTH)	+	0.1 fc	0.2 fc	0.0 fc	N / A	N / A
7 FT BEYOND PROPERTY LINE(WEST)	+	0.7 fc	1.0 fc	0.1 fc	10.0:1	7.0:1
DUMPSTER ACCESS	+	5.8 fc	7.9 fc	3.5 fc	2.3:1	1.7:1
ENTRY	+	12.7 fc	23.0 fc	2.2 fc	10.5:1	5.8:1
EXTERIOR PARKING AREA(NORTH)	+	3.4 fc	12.9 fc	0.3 fc	43.0:1	11.3:1
EXTERIOR PARKING AREA(WEST)	+	2.2 fc	5.8 fc	0.5 fc	11.6:1	4.4:1
GARAGE	+	5.4 fc	19.4 fc	0.5 fc	38.8:1	11.0:1
PROPERTY LINE	+	0.9 fc	2.5 fc	0.1 fc	25.0:1	9.0:1

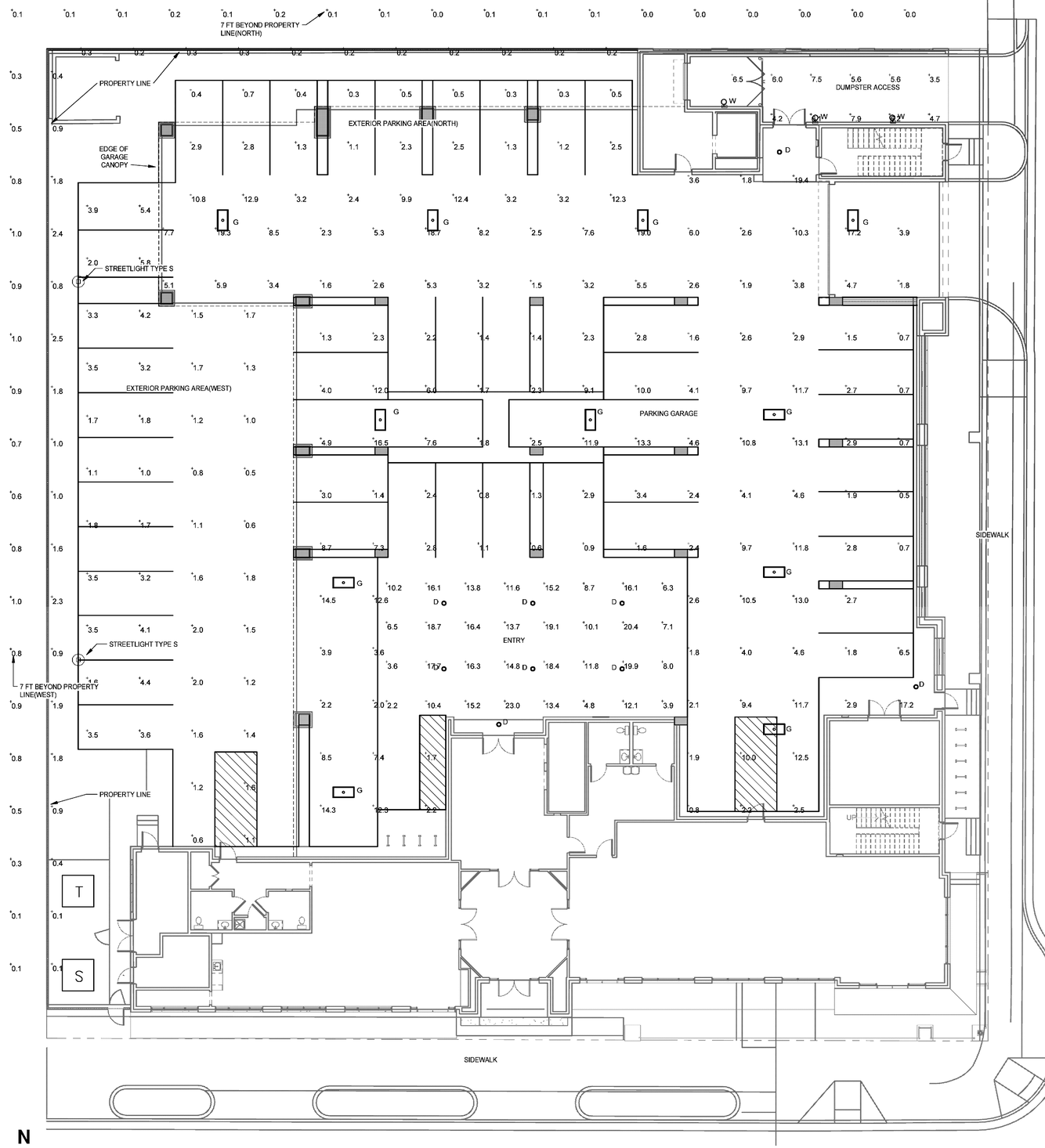

ELECTRICAL SITE PHOTOMETRICS

3/32" = 1'-0"

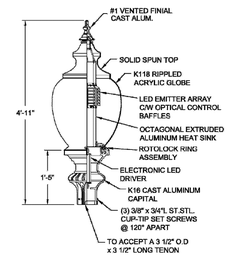

LUMINAIRE SPECIFICATIONS

CATALOGUE NO.:	K118R-BAAR-III/V-60 OR 100(SSL) -5000 OR 8000-120:277V-K16-SST
QUANTITY:	1
GLOBE MOUNTING:	ROTOLOCK
OPTICAL SYSTEM:	BAFFLED ARRAY ACRYLIC RIPPLED
IES CLASS.:	TYPE III/V
INPUT WATTAGE:	60W OR 100W SOLID STATE LIGHTING
SERIES:	5000 OR 8000
CCT:	4500K
LINE VOLTAGE:	120:277V
POLE ADAPTOR:	K16
PAINT:	TEXTURED BLACK
OPTIONS:	SOLID SPUN TOP

BALLAST SPECIFICATIONS

	SUPPLIED
BALLAST TYPE:	ELECTRONIC
BALLAST MANU.:	-
CATALOGUE NO.:	-

OPTIONS
QUICK DISCONNECT ☒
TERMINAL BLOCK ☐

OTHER: 540 JOULE @ 2mS 20kA-8/20uS SURGE PROTECTION

MANUFACTURED BY:
KING LUMINAIRE COMPANY INC.
P.O. BOX 266
1153 STATE ROUTE 46N
JEFFERSON, OH 44047
WWW.STRESSCRETE.COM

STREETLIGHT TYPE S SECTION

NO SCALE

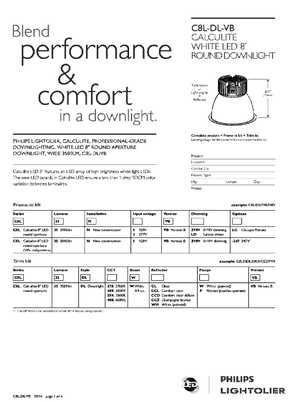

GARAGE FIXTURE D

NO SCALE

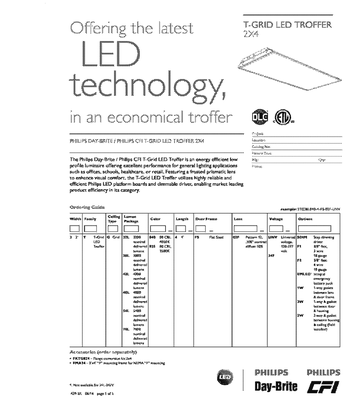

GARAGE FIXTURE G

NO SCALE

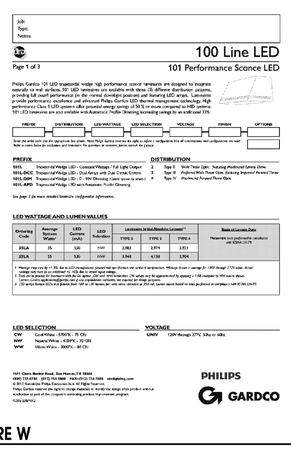

FIXTURE W

NO SCALE

BEERYRIO
8001 BRADDOCK ROAD, SUITE 400, SPRINGFIELD, VA 22151
PHONE (703) 426-9057 FAX (703) 426-9280
MOSELEYARCHITECTS.COM

COMMONWEALTH OF VIRGINIA
BRIAN C. WELLS
Lic. No. 046269
8-21-14
PROFESSIONAL ENGINEER

THE KENSINGTON OF FALLS CHURCH

530304
Kensington Senior Development, LLC
700 W. Broad Street, Falls Church, VA 22046

PROJECT NO: 530304	DATE: AUGUST 22, 2014

REVISIONS

NO.	DESCRIPTION	DATE
	SITE PLAN FIRST SUBMISSION	07/15/14
	SITE PLAN SECOND SUBMISSION	08/22/14

ELECTRICAL SITE LIGHTING PLAN

E1.0

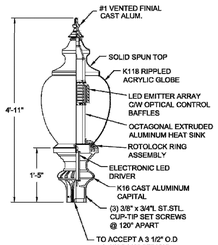

LUMINAIRE SPECIFICATIONS

CATALOGUE NO.:	K118R-BAAR-III/V-60 OR 100(SSL) -5000 OR 8000-120:277V-K16-SST
QUANTITY:	
GLOBE MOUNTING:	ROTOLOCK
OPTICAL SYSTEM:	BAFFLED ARRAY ACRYLIC RIPPLED
IES CLASS.:	TYPE III/V
INPUT WATTAGE:	60W OR 100W SOLID STATE LIGHTING
SERIES:	5000 OR 8000
CCT:	4500K
LINE VOLTAGE:	120:277V
POLE ADAPTOR:	K16
PAINT:	TEXTURED BLACK
OPTIONS:	SOLID SPUN TOP

BALLAST SPECIFICATIONS

	SUPPLIED
BALLAST TYPE:	ELECTRONIC
BALLAST MANU.:	-
CATALOGUE NO.:	-

OPTIONS
QUICK DISCONNECT ☒
TERMINAL BLOCK ☐

OTHER: 540 JOULE @ 2mS 20kA-8/20uS SURGE PROTECTION

MANUFACTURED BY:
KING LUMINAIRE COMPANY INC.
P.O. BOX 269
1153 STATE ROUTE 46N
JEFFERSON, OH 44047
WWW.STRESSCRETE.COM

STREETLIGHT TYPE S SECTION

NO SCALE

STATISTICS

Description	Symbol	Avg	Max	Min	Max/Min	Avg/Min
7 FT BEYOND PROPERTY LINE (NORTH)	+	0.1 fc	0.2 fc	0.0 fc	N / A	N / A
7 FT BEYOND PROPERTY LINE(WEST)	+	0.7 fc	1.0 fc	0.1 fc	10.0:1	7.0:1
DUMPSTER ACCESS	+	5.8 fc	7.9 fc	3.5 fc	2.3:1	1.7:1
ENTRY	+	12.7 fc	23.0 fc	2.2 fc	10.5:1	5.8:1
EXTERIOR PARKING AREA(NORTH)	+	3.4 fc	12.9 fc	0.3 fc	43.0:1	11.3:1
EXTERIOR PARKING AREA(WEST)	+	2.2 fc	5.8 fc	0.5 fc	11.6:1	4.4:1
GARAGE	+	5.4 fc	19.4 fc	0.5 fc	38.8:1	11.0:1
PROPERTY LINE	+	0.9 fc	2.5 fc	0.1 fc	25.0:1	9.0:1
SIDEWALK	+	3.4 fc	8.4 fc	0.5 fc	16.8:1	6.8:1

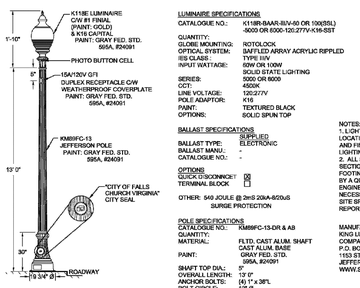

LUMINAIRE SPECIFICATIONS

CATALOGUE NO.:	K118R-BAAR-III/V-60 OR 100(SSL) -5000 OR 8000-120:277V-K16-SST
QUANTITY:	
GLOBE MOUNTING:	ROTOLOCK
OPTICAL SYSTEM:	BAFFLED ARRAY ACRYLIC RIPPLED
IES CLASS.:	TYPE III/V
INPUT WATTAGE:	60W OR 100W SOLID STATE LIGHTING
SERIES:	5000 OR 8000
CCT:	4500K
LINE VOLTAGE:	120:277V
POLE ADAPTOR:	K16
PAINT:	TEXTURED BLACK
OPTIONS:	SOLID SPUN TOP

BALLAST SPECIFICATIONS

	SUPPLIED
BALLAST TYPE:	ELECTRONIC
BALLAST MANU.:	-
CATALOGUE NO.:	-

OPTIONS
QUICK DISCONNECT ☒
TERMINAL BLOCK ☐

OTHER: 540 JOULE @ 2mS 20kA-8/20uS SURGE PROTECTION

POLE SPECIFICATIONS

CATALOGUE NO.:	KM66FC-13-DR & A8
QUANTITY:	
MATERIAL:	FLTD. CAST ALUM. SHAFT CAST ALUM. BASE
PAINT:	GRAY FED. STD. 595A, #24091
SHAFT TOP DIA.:	5"
OVERALL LENGTH:	13' 0"
ANCHOR BOLTS:	(6) 1" x 38"L
BOLT CIRCLE:	12" Ø

NOTES:
1. LIGHT SPECIFICATIONS AND LOCATIONS TO BE REVIEWED AND FINALIZED BY A QUALIFIED LIGHTING ENGINEER.
2. ALL STRUCTURAL CROSS SECTIONS, INCLUDING FOOTINGS, SHALL BE REVIEWED BY A QUALIFIED STRUCTURAL ENGINEER AND MODIFIED AS NECESSARY BASED ON THE SITE SPECIFIC GEOTECHNICAL REPORT.

MANUFACTURED BY:
KING LUMINAIRE COMPANY INC.
P.O. BOX 269
1153 STATE ROUTE 46N
JEFFERSON, OH 44047
WWW.STRESSCRETE.COM

STREETLIGHT TYPE S

NO SCALE

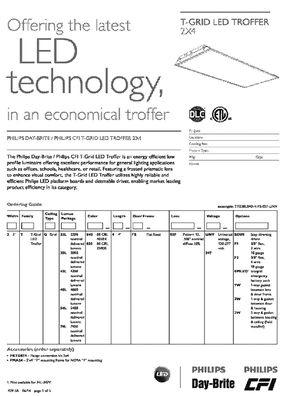

GARAGE FIXTURE G

NO SCALE

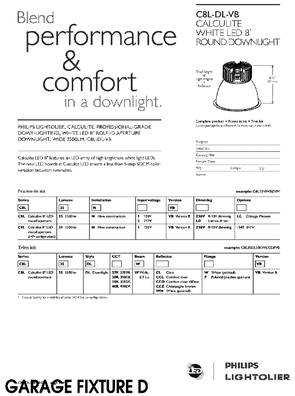

GARAGE FIXTURE D

NO SCALE

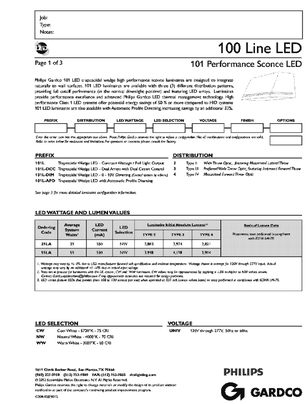

FIXTURE W

NO SCALE

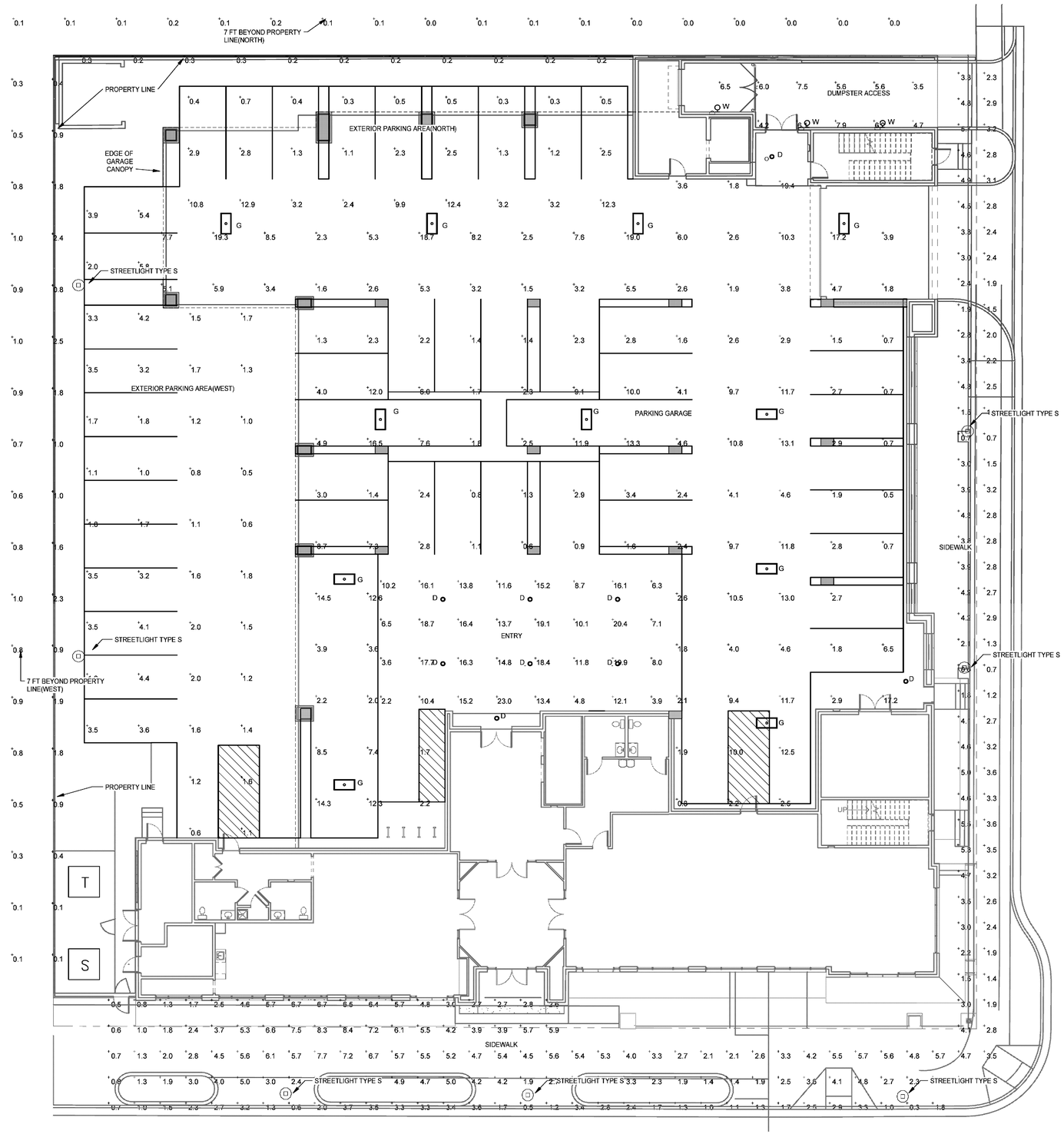

ELECTRICAL SITE PHOTOMETRICS

3/32" = 1'-0"

BEERYRIO
8001 BRADDOCK ROAD, SUITE 400, SPRINGFIELD, VA 22151
PHONE (703) 426-9057 FAX (703) 426-9280
MOSELEYARCHITECTS.COM

COMMONWEALTH OF VIRGINIA
BRIAN C. WELLS
Lic. No. 046269
8-21-14
PROFESSIONAL ENGINEER

THE KENSINGTON OF FALLS CHURCH

530304
Kensington Senior Development, LLC
700 W. Broad Street, Falls Church, VA 22046

PROJECT NO: 530304	DATE: AUGUST 22, 2014

REVISIONS

NO.	DESCRIPTION	DATE
	SITE PLAN FIRST SUBMISSION	07/15/14
	SITE PLAN SECOND SUBMISSION	08/22/14

ELECTRICAL SITE LIGHTING PLAN - INCLUDING SIDEWALKS

E1.1

MASTER KEYING LEGEND

03450.A	PRECAST CONCRETE SILL
03450.A2	PRECAST CONCRETE WATERTABLE
04200.A	STANDARD BRICK
04200.A2	SOLDIER COURSE
06400.E3	FYPON EAVE BRACKET
07300.A	COMPOSITE SHINGLES
07410.A	STANDING SEAM METAL ROOF
07460.G4	CEMENTITIOUS TRIM
07600.C	ALUMINUM GUTTER AND DOWNSPOUT
07700.C	RIDGE VENT
08610.A	WINDOW UNIT

ELEVATION MATERIAL LEGEND

- COMPOSITE SHINGLES
- STANDING SEAM METAL ROOF
- 7" EXPOSED CEMENTITIOUS SIDING
- BRICK - RUNNING BOND
- BRICK - FLEMISH GARDEN WALL BOND
- MASONRY UNITS

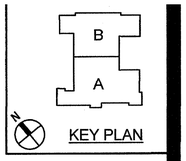

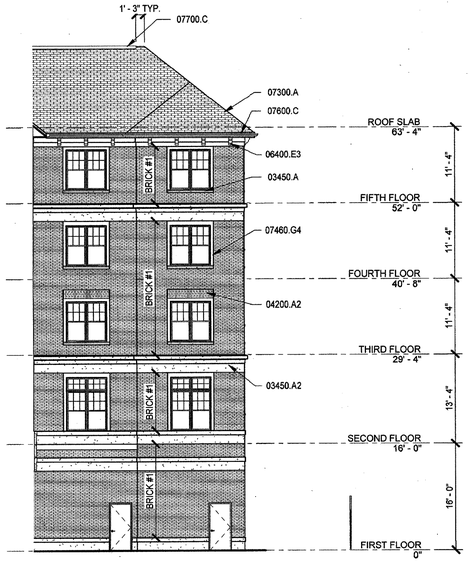

4 A2.2.1 A4.0.1 **PARTIAL ELEVATION**
3/32" = 1'-0"

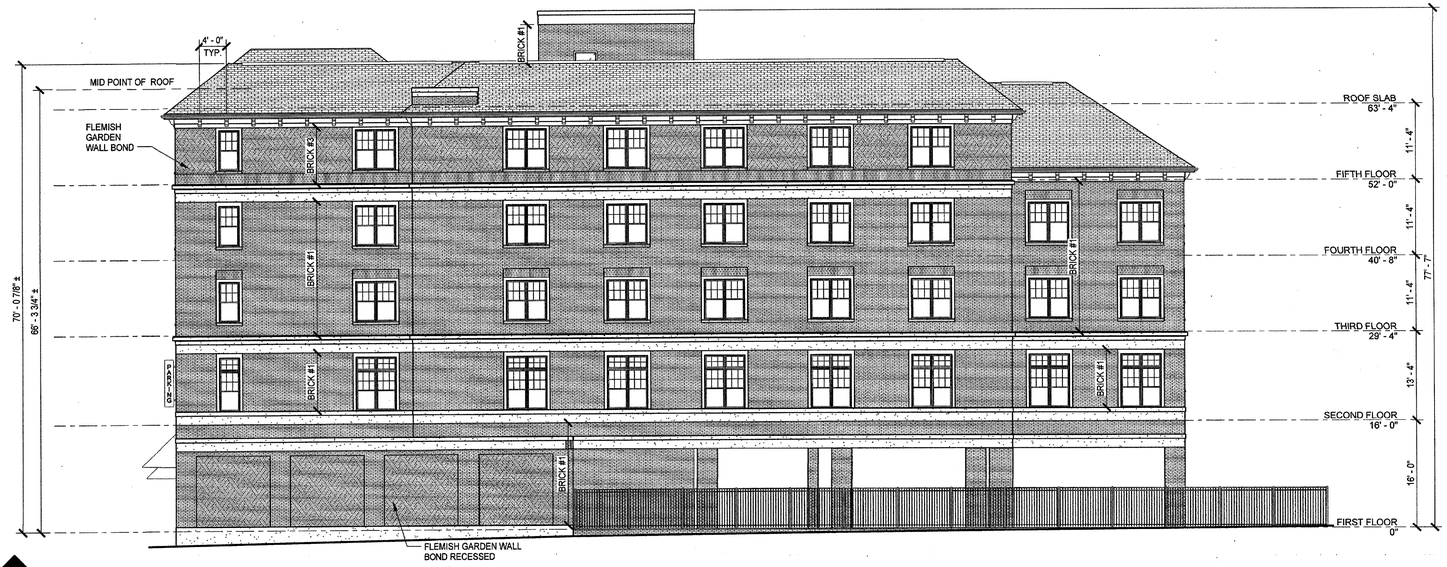

2 A10.1 A4.0.1 **BACK ELEVATION**
3/32" = 1'-0"

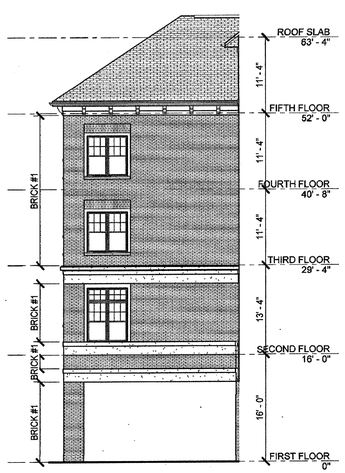

3 A2.2.2 A4.0.1 **PARTIAL ELEVATION**
3/32" = 1'-0"

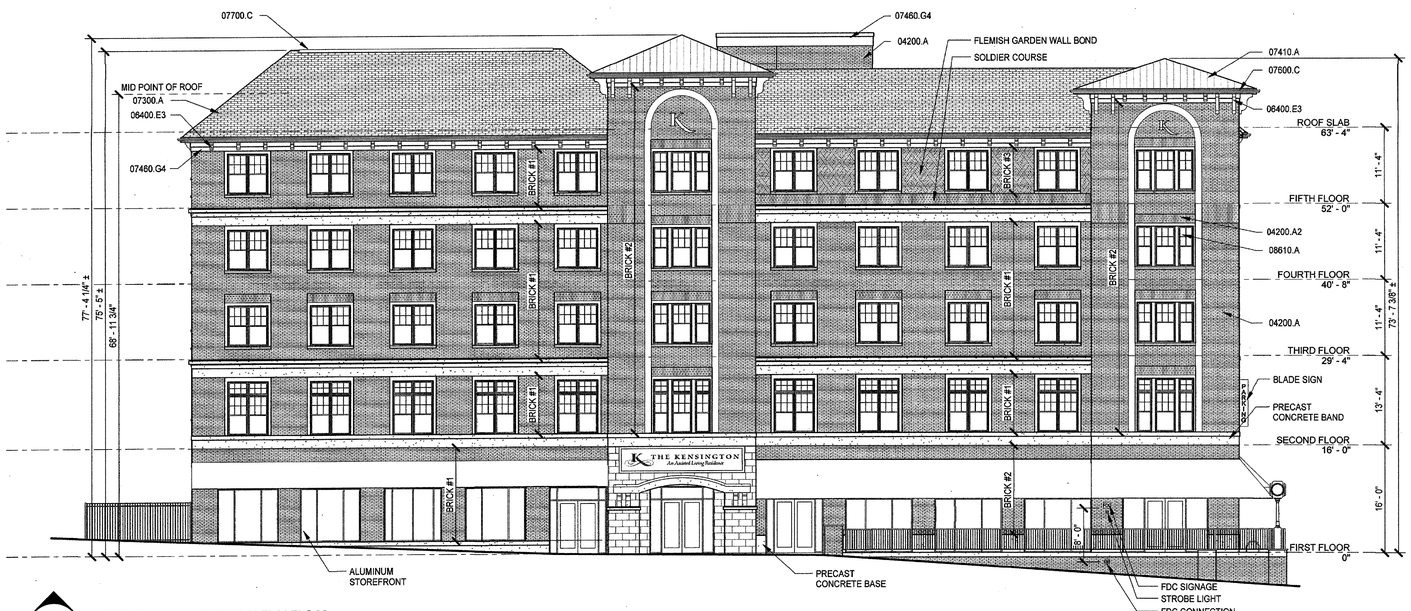

1 A10.1 A4.0.1 **WEST BROAD STREET ELEVATION**
3/32" = 1'-0"

BEERYRIO
8001 BRADDOCK ROAD, SUITE 400, SPRINGFIELD, VA 22151
PHONE (703) 426-9057 FAX (703) 426-9280
MOSELEVARCHITECTS.COM

COMMONWEALTH OF VIRGINIA
STEVEN L. RUIZ
No. 0170
ARCHITECT

THE KENSINGTON OF FALLS CHURCH

530304
Kensington Senior Development, LLC
700 W. Broad Street, Falls Church, VA 22046

PROJECT NO: 530304	DATE: AUGUST 22, 2014

REVISIONS

NO.	DESCRIPTION	DATE
	SITE PLAN FIRST SUBMISSION	07/15/14
	SITE PLAN SECOND SUBMISSION	08/22/14

BUILDING ELEVATIONS

A4.0.1

MASTER KEYING LEGEND

03450.A	PRECAST CONCRETE SILL
03450.A2	PRECAST CONCRETE WATERTABLE
04200.A	STANDARD BRICK
04200.A2	SOLDIER COURSE
07410.A	STANDING SEAM METAL ROOF
07460.G4	CEMENTITIOUS TRIM
07600.C	ALUMINUM GUTTER AND DOWNSPOUT
08610.A	WINDOW UNIT

ELEVATION MATERIAL LEGEND

- COMPOSITE SHINGLES
- STANDING SEAM METAL ROOF
- 7" EXPOSED CEMENTITIOUS SIDING
- BRICK - RUNNING BOND
- BRICK - FLEMISH GARDEN WALL BOND
- MASONRY UNITS

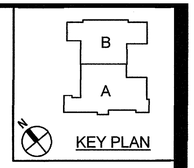

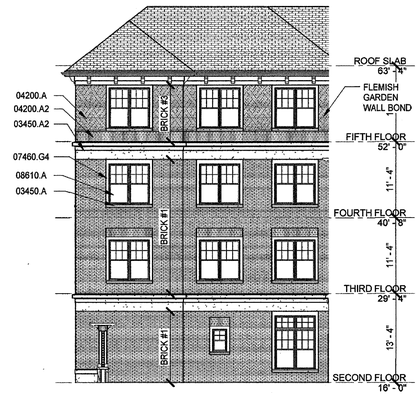

4 A10.1 A4.0.2 **PARTIAL ELEVATION**
3/32" = 1'-0"

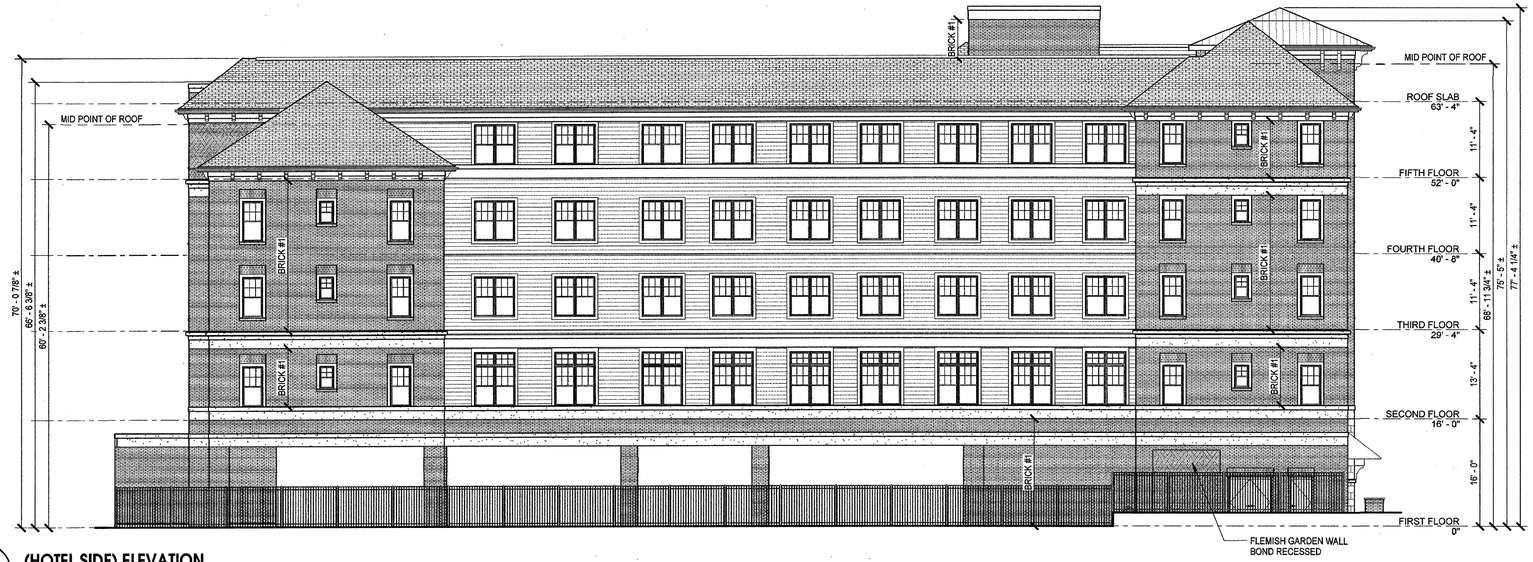

2 A10.1 A4.0.2 **(HOTEL SIDE) ELEVATION**
3/32" = 1'-0"

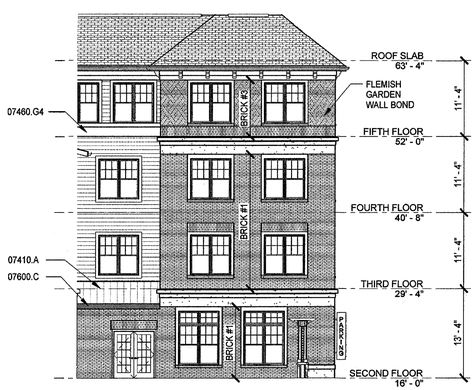

3 A10.1 A4.0.2 **PARTIAL ELEVATION**
3/32" = 1'-0"

1 A10.1 A4.0.2 **NORTH LEE STREET ELEVATION**
3/32" = 1'-0"

BEERYRIO
8001 BRADDOCK ROAD, SUITE 400, SPRINGFIELD, VA 22151
PHONE (703) 426-9057 FAX (703) 426-9280
MOSELEYARCHITECTS.COM

COMMONWEALTH OF VIRGINIA
STEVEN H. RUIZ
No. 0[illegible]70
ARCHITECT

THE KENSINGTON OF FALLS CHURCH

530304
Kensington Senior Development, LLC
700 W. Broad Street, Falls Church, VA 22046

PROJECT NO: 530304	DATE: AUGUST 22, 2014

REVISIONS

NO.	DESCRIPTION	DATE
	SITE PLAN FIRST SUBMISSION	07/15/14
	SITE PLAN SECOND SUBMISSION	08/22/14

BUILDING ELEVATIONS

A4.0.2